STK3013

Proximity Sensor with Built-in IR LED

Datasheet

Version - 1.4

2015/05/20

Confidential for SAMSUNG

Sensortek Technology Corporation

1. OVERVIEW

Description

The STK3013 is an infrared light to digital converter with a built-in IR LED and I^2C interface. This device provides infrared sensing to allow proximity estimation featured with interrupt function.

For proximity sensing, the STK3013 incorporates a photodiode, timing controller and ADC in the same chip. The spectral response is optimized for wavelength 940nm infrared light. The STK3013 provides programmable duty setting to drive IR LED and employs a noise cancellation scheme to highly reject unwanted ambient IR noise.

The STK3013 has excellent temperature compensation, robust on-chip refresh rate setting without external components. Software shutdown mode control is provided for power saving application. The STK3013 operating voltage range is 1.7V to 3.6V.

Feature

- 16 bits resolution for proximity detection
- Built-in LED driver with flexible setting
  - LED turn-on time : 16 steps IT x 64 duty cycle options
  - LED current : 12.5 / 25 / 50 / 100 mA
- Flexible interrupt setting
  - Several interrupt modes meet application requirements.
  - Flag modes are included.
  - Interrupt persistence : 1 / 4 times
- Low noise design
- Ambient IR noise cancellation
  - Immunity to 50Hz/60Hz fluorescent light flicker
- 940nm LED for STK3013.

General

- Fully digital control with I^2C interface
  - 1.7 ~ 3.6V I^2C interface
- Low power design
  - Standby mode
  - Wait mode
- V_{DD} wide operation voltage : 1.7~3.6V
- Excellent temperature compensation: -40 to 85℃
- Available package options:
  - 4x2x1.1 (mm)
- Lead-free package (RoHS compliant)

Applications

- Mobile Phone, Smart-phone, PDA

Confidential for SAMSUNG

 @copyright 2015 Sensortek Technology Corp.

2. FUNCTION BLOCK

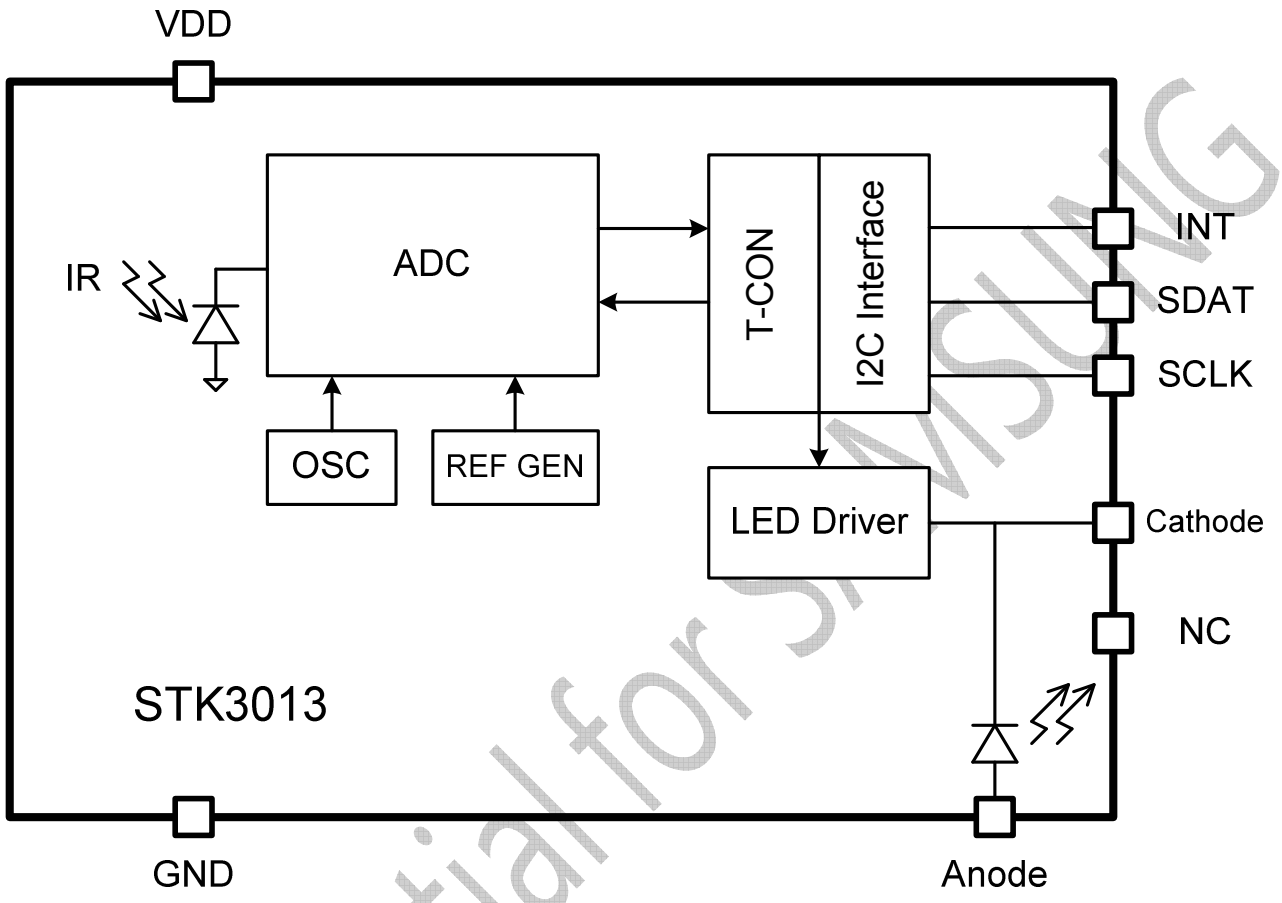

Confidential for SAMSUNG

 @copyright 2015 Sensortek Technology Corp.

3. PINOUT DIAGRAM

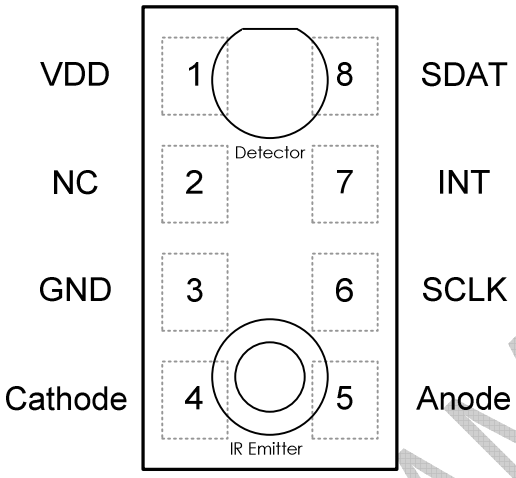

STK3013

Top View

4. PIN DESCRIPTION

Pin No.	Pin Name	Dir.	Pin Function
1	VDD	PWR	Power supply: 1.7V to 3.6V.
2	NC		No connect.
3	GND	GND	Ground. The thermal pad is also connected to the GND pin.
4	Cathode	I	IR LED driver pin connecting to the cathode of the IR LED. The sink current of the IR LED driver can be programmed through I^2C or the external resistor.
5	Anode	I	Anode of the embedded IR LED, connect to power.
6	SCLK	I	I^2C serial clock line.
7	INT	O	Interrupt pin, LO for interrupt alarming. (Open Drain)
8	SDAT	B	I^2C serial data line. (Open Drain)

Direction denotation:

O	Output	GND	Ground
I	Input	B	Bi-direction
PWR	Power	NC	Not Connect

Confidential for SAMSUNG

 @copyright 2015 Sensortek Technology Corp.

5. ELECTRICAL SPECIFICATIONS

Absolute Maximum Ratings

Symbol	Parameter	Min.	Typ.	Max.	Unit
VDD	Supply voltage	-0.3	—	3.8	V
V_{LEDA}	Voltage of LED's anode	-0.3	—	4.7	V
V_{LDR}	Voltage of LDR			3.8	V
Ta	Operation temperature	-40	—	85	°C
Ts	Storage temperature	-40	—	85	°C

NOTE: All voltages are measured with respect to GND

Recommended Operating Conditions

Symbol	Parameter	Min.	Typ.	Max.	Unit
VDD	Supply voltage	1.7	—	3.6	V
V_{LEDA}	Voltage of LED's anode	2.4	—	4.6	V
f_{I2C}	Clock frequency of I^2C	—	—	400	KHz
Ta	Operation temperature	-40	—	85	°C

NOTE: All voltages are measured with respect to GND

Symbol	Parameter	Max.	Unit
ESD	Electrostatic discharge protection	2 (HBM)	kV
		200 (MM)	V
		100 (Latch Up)	mA

NOTE: All voltages are measured with respect to GND

5.1 Electrical and Optical Characteristics

VDD = VLED = 2.8V, under room temperature 25℃ (unl ess otherwise noted)

Symbol	Parameter	Condition	Min.	Typ.	Max.	Unit
Operation Characteristics						
I_{PS}	PS supply current	Note1,2		100		μA
I_{WAIT}	Supply current at wait state	Note1,2		29		μA
I_{SD}	Shutdown current	Note1,2		0.2	1	μA
V_{IH}	Logic high, I^2C	Note4	1.3		VDD	V
V_{IL}	Logic low, I^2C	Note5	—		0.4	V
Proximity Characteristics						
λp_2	High sensitivity wavelength range for PS			940		nm
PS_{FSCNT}	Full scale PS counts				65535	counts
$ILED_{SINK}$	LED sink current	IRDR_LED[1:0] Note3				
		00		12.5		mA
		01		25		mA

Confidential for SAMSUNG

 @copyright 2015 Sensortek Technology Corp.

		10		50		mA
		11		100		mA
LED_{DUTY}	LED duty adjust steps				64	steps

Note 1 : No LED operation.
Note 2 : GAIN_PS[1:0] = 2'b11, .IT_PS[3:0] = 4'b0001.
Note 3 : The voltage of LDR pin is fixed at 1V.
Note 4 : I^2C logical high voltage level is specified as worst-case condition when all of the recommended operation supply voltages (VDD) are taken into consideration. The logical high level is different when different supply voltage is applied.
Note 5 : I^2C logical low voltage level is specified as worst-case condition when all of the recommended operation supply voltages (VDD) are taken into consideration. The logical low level is different when different supply voltage is applied.
Note 6 : 18% gray card as reflector @ 30mm distance and no glass or apertures above the module.

5.2 Timing Chart

Characteristics of the SDA and SCL I/O

Symbol	Parameter	Standard Mode		Fast Mode		Unit
		Min.	Max.	Min.	Max.	
f_{SCLK}	SCL clock frequency	10	100	10	400	KHz
t_{HDSTA}	Hold time after (repeated) start condition. After this period, the first clock is generated	4.0	—	0.6	—	μs
t_{LOW}	LOW period of the SCL clock	4.7	—	1.3	—	μs
t_{HIGH}	HIGH period of the SCL clock	4.0	—	0.6	—	μs
t_{SUSTA}	Set-up time for a repeated START condition	4.7	—	0.6	—	μs
t_{HDDAT}	Data hold time	0	—	0	—	ns
t_{SUDAT}	Data set-up time	250	—	100	—	ns
t_r	Rise time of both SDA and SCL signals	—	1000	—	300	ns
t_f	Fall time of both SDA and SCL signals	—	300	—	300	ns
t_{SUSTO}	Set-up time for STOP condition	4.0	—	0.6	—	μs
t_{BUF}	Bus free time between a STOP and START condition	4.7	—	1.3	—	μs

Note 1: f_{SCLK} is the $(t_{SCLK})^{-1}$.

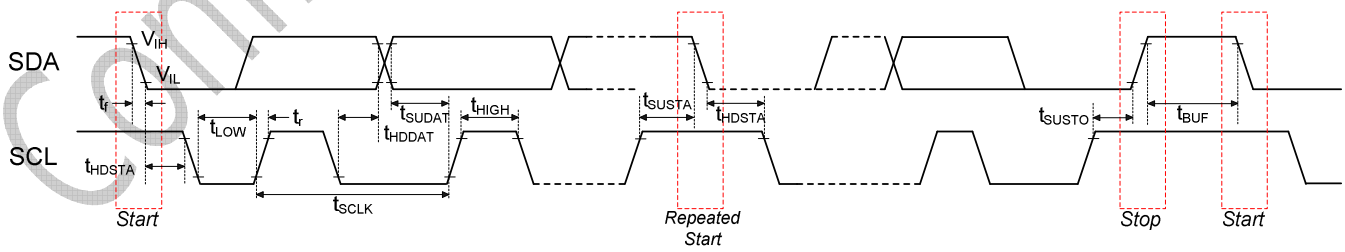

Timing Chart of the SDA and SCL

Confidential for SAMSUNG

 @copyright 2015 Sensortek Technology Corp.

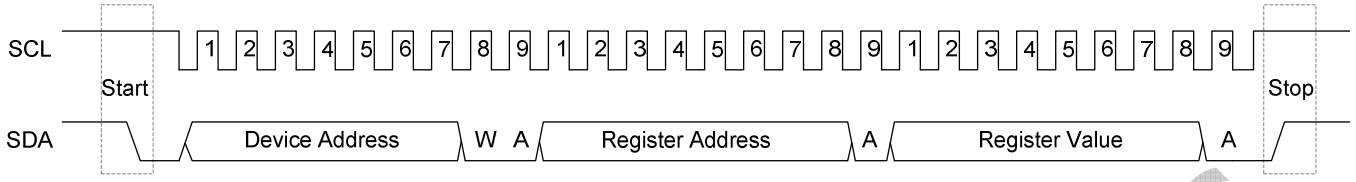

Write Command

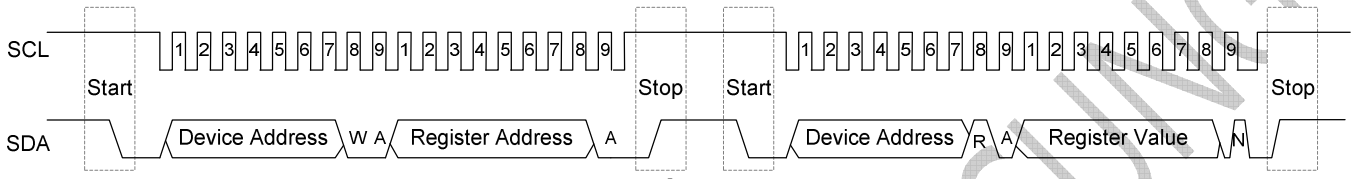

Read Data

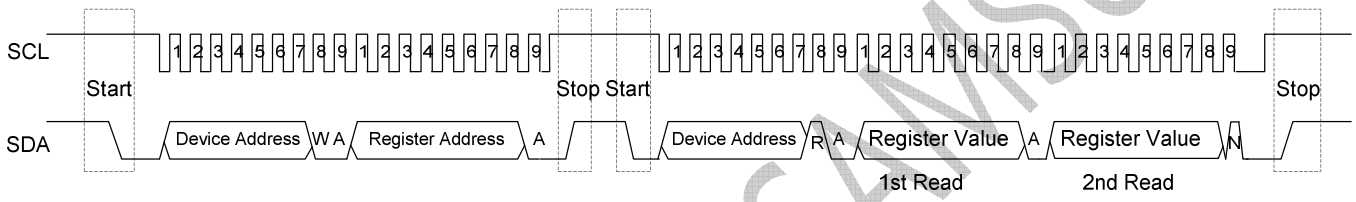

Sequential Read Data

Confidential for SAMSUNG

 @copyright 2015 Sensortek Technology Corp.

6. PRINPICLE OF OPERATION

Digital Interface

STK3013 contains eight-bit registers accessed via the I^2C bus. All operations can be controlled by the command register. The simple command structure makes user easy to program the operation setting and latch the light data from STK3013. Section 5.2 Timing chart displays the STK3013 I^2C command format for reading and writing operation between host and STK3013.

6.1 General Operations

Slave Address

STK3013 provides fixed I^2C slave address of 0x48 using 7 bit addressing protocol.

Slave Address	R/W Command Bit	OPERATION
0x48 (followed by the R/W bit)	0	Write Command to STK3013
	1	Read Data form STK3013

Function Description

ADDR	REG NAME	BIT								Default
		7	6	5	4	3	2	1	0	
00h	STATE	0		EN_ASO	EN_IRO	SEL_FIX_OFS	EN_WAIT	0	EN_PS	00h
01h	PSCTRL	PRS_PS[1:0]		GAIN_PS[1:0]		IT_PS[3:0]				31h
02h	Reserved	Reserved								
03h	LEDCTRL	IRDR_LED[1:0]		DT_LED[5:0]						FFh
04h	INT	0			INT_OUI	0	INT_PS[2:0]			00h
05h	WAIT	WAIT[7:0]								00h
06h	THDH1_PS	THDH_PS[15:8]								FFh
07h	THDH2_PS	THDH_PS[7:0]								FFh
08h	THDL1_PS	THDL_PS[15:8]								00h
09h	THDL2_PS	THDL_PS[7:0]								00h
0Ah	Reserved	Reserved								
0Bh	Reserved	Reserved								
0Ch	Reserved	Reserved								
0Dh	Reserved	Reserved								
10h	FLAG		FLG_PSDR		FLG_PSINT		FLG_OUI		FLG_NF	01h
11h	DATA1_PS	DATA_PS[15:8]								00h
12h	DATA2_PS	DATA_PS[7:0]								00h
13h	**Reserved**	**Reserved**								
14h	**Reserved**	**Reserved**								
15h	DATA1_OFFSET	DATA_OFFSET[15:8]								00h
16h	DATA2_OFFSET	DATA_OFFSET[7:0]								00h
17h	Reserved	Reserved								
18h	Reserved	Reserved								
3Eh	PDT_ID	0	0	1	1	0	0	0	1	31h

Confidential for SAMSUNG

 @copyright 2015 Sensortek Technology Corp.

3Fh	Reserved	Reserved	
80h	SOFT_RESET	Wrtite to soft reset	

STATE Register (00h)

1. EN_PS (Bit[0]), EN_WAIT (Bit[2]) :
   These bits are used to define what state for the device to be. The operation state flow will be stated later.

BIT [2:0]	Description
000	Standby
001	No Wait Time, Enable PS
101	Set Wait Time, Enable PS
others	Not Applied

2. SEL_FIX_OFS (Bit[3]):
   This bit is needed to be set to 1 when EN_ASO function is enabled.

3. EN_IRO (Bit[4]) :
   To enable (1) / disable (0) Interrupt Run Once function while Interrupt Run Once will be stated in the later section. IRO function is suggested to be enabled.

4. EN_ASO (Bit[5]) :
   To enable (1) / disable (0) PS DATA stored in register 11h/12h is the result that ADC output subtract offset data stored in register 15h/16h. This is used to cancel the system cross talk (offset) and the SEL_FIX_OFS is also needed to be set to 1.

   ex: If both SEL_FIX_OFS and EN_ASO are set to 1, then DATA_PS[15:0] = DATA_PS_ADC – DATA_OFFSET[15:0] where DATA_PS_ADC is the ADC output while PS conversion is completed.

PSCTRL Register (01h)

2. IT_PS[3:0] (Bit[3:0]) :
   The refresh time of PS can be tuned by IT_PS[3:0]. Through setting IT_PS[3:0], user could achieve very wide range flexibly in choosing refresh time for different application demand. It is suggested to choose IT_PS time less than 1.56ms to minimize the influence coming from flicker noise. STK3013 takes 2 times of IT_PS to perform proximity sensing. The default value of IT_PS is 0.37ms.

BIT [3:0]	REFRESH TIME	Multiple of Base Refresh Time
0000	0.185 ms (Base Refresh Time)	x 1
0001	0.37 ms	x 2
0010	0.741 ms	x 4
…..	…….	…..
1111	6070 ms	x 32768

2. GAIN_PS[1:0] (Bit[5:4]) :
   The Gain setting for PS sensitivity range is summarized in following table. It is suggested to choose x64 gain setting to get the optimum performance. The default value of GAIN_PS is x64.

BIT [5:4]	Gain
00	x1
01	x4
10	x16
11	x64

1. PRS_PS[1:0] (Bit[7:6]) :
   The PS has an interrupt persistence filter. The persistence filter allows user to specify the number of consecutive

Confidential for SAMSUNG

 @copyright 2015 Sensortek Technology Corp.

out-of-threshold PS occurrences before an interrupt is triggered.

BIT [7:6]	Consecutive Out-of-threshold PS Occurrences
00	1 time
01	4 times

LEDCTRL Register (03h)

2. DT_LED[5:0] (Bit[5:0]) :
IRLED driving ON-duty (with respect to refresh time) could be adjusted through DT_LED. Through setting DT_LED, IRLED ON-duty period can vary from 1/64 to 64/64 of the set IT_PS time.

For the following example table, when the IT_PS[3:0] = 4'b0000 (PS refresh time is 0.185ms), user may set the IRLED ON-duty period 1/64 of 0.185ms (= 2.89us) by defining DT_LED[5:0] = 6'b000000. By following this, user can choose the desired LED ON-duty period for STK3013

BIT [5:0]	IRLED ON-Duty Period	IRLED ON-Duty Period under IT_PS = 0000
000000	IT_PS X 1/64	2.89 us
000001	IT_PS X 2/64	5.78 us
……..	….	…….
111111	IT_PS X 64/64	0.185 ms

2. IRDR[1:0] (Bit[7:6]) :
The STK3013 provides different driving ability for IRLED through setting IRDR.

BIT [7:6]	IRLED Driving Current
00	12.5mA current sink
01	25mA current sink
10	50mA current sink
11	100mA current sink

Confidential for SAMSUNG

 @copyright 2015 Sensortek Technology Corp.

System Operation State

Normal Mode

The STK3013 provides control of proximity detection, and power management functionality through an internal state machine. After a power-on-reset, the device is in the standby mode. As soon as EN_PS is set to 1, the device will move to the start state. It will then continue go through the PS, and Wait cyclic. If these states are enabled, the device will execute each function. If EN_WAIT or EN_PS is changed during active mode it will jump to start state immediately and remains the data of registers DATA_PS without updating. It will go into a low power standby mode again only when EN_WAIT and EN_PS are all set to 0.

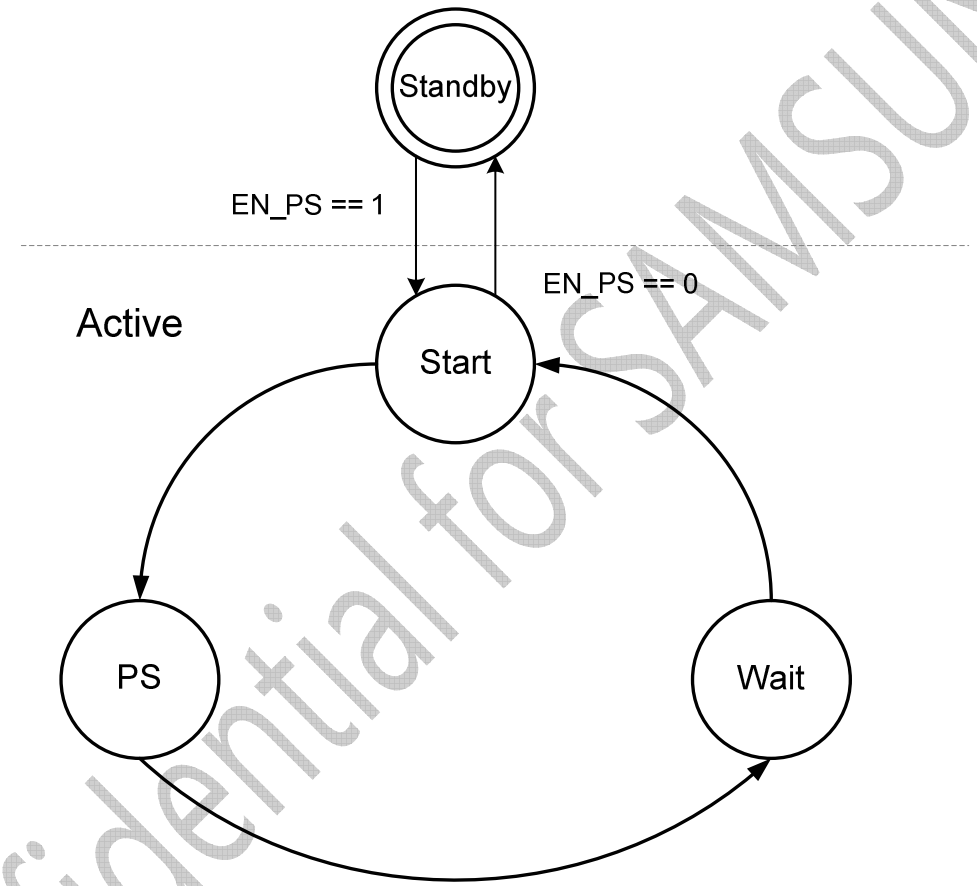

Confidential for SAMSUNG

 @copyright 2015 Sensortek Technology Corp.

Interrupt Run Once mode

STK3013 is provided IRO mode to save power and simplify system control. While EN_IRO is enabled, the state machine will go to standby mode after PS interrupt event triggered and IC will stop sensing for saving power. The state machine will leave standby mode once the FLG_PSINT is cleared. Please see follow state diagram.

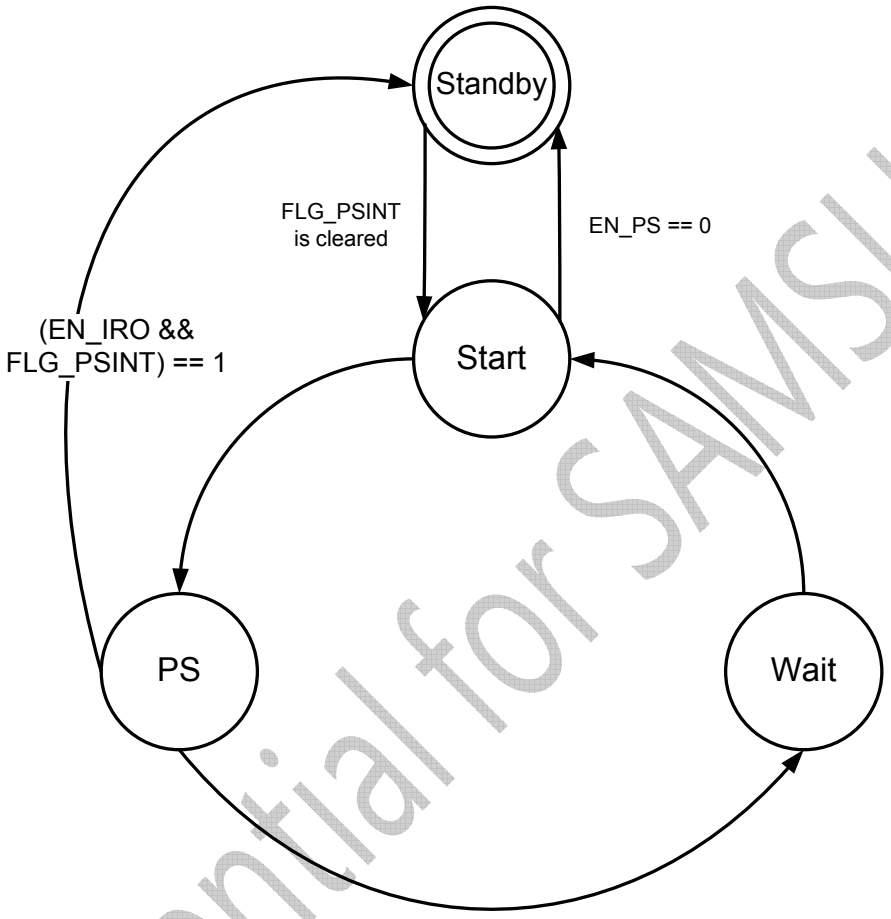

Confidential for SAMSUNG

 @copyright 2015 Sensortek Technology Corp.

Power management

Example: Around 50 ms Cycle Time

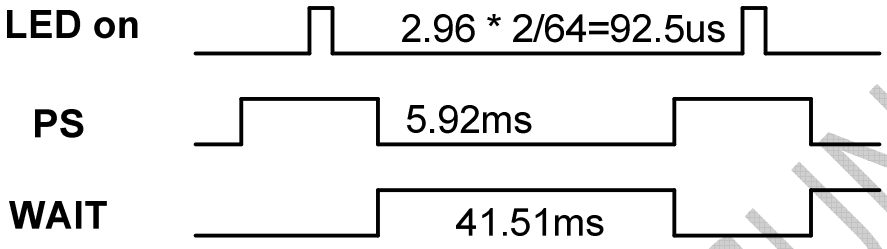

State	Duration (ms)	Current (mA)
LED on	2.96 * 2/64	100.0
PS	5.92	0.100
WAIT	41.51	0.029

Avg = ((2.96*2/64*100)+(5.92*0.1)+(41.51*0.029))/47.5= 232uA

INT Register (04h)

2. INT_PS[2:0] (Bit[2:0]) :
INT_PS programs interrupt occurrence criteria for PS.

BIT [2:0]	OPERATION
000	PS INT Disable
001	PS INT Enable, interrupt is issued while FLG_NF is toggled. FLG_NF is defined at bit0 of FLAG Register (10h) to indicate the PS state is near or far.
010	INT is treated as a flag and not an interrupt. INT = 1 if DATA_PS[15:0] > THDH_PS[15:0] and INT = 0 if DATA_PS[15:0] < THDL_PS[15:0].
011	INT is treated as a flag and not an interrupt. INT = 0 if DATA_PS[15:0] > THDH_PS[15:0] and INT = 1 if DATA_PS[15:0] < THDL_PS[15:0].
100	PS INT Enable, interrupt according to system pre-defined sequence. Refer to the following description.
101	PS INT Enable, interrupt only if the PS Data value is higher than THDH_PS[15:0].
110	PS INT Enable, interrupt only if the PS Data value is lower than THDL_PS[15:0].
111	PS INT Enable, interrupt if the PS Data value is higher than THDH_PS[15:0] or the PS Data value is lower than THDL_PS[15:0]. Threshold ysteresis is not applied.

Confidential for SAMSUNG

 @copyright 2015 Sensortek Technology Corp.

FLAG mode

While INT_PS[2:0] is set to 3'b010 or 3'b011. The INT pin is intended to be used as flag to indicate if any object is proximity to the sensor or not. The MCU or application processor just reads the value of the INT pin to recognize the state without access the I^2C interface. INT can not be cleared by host's access.

If the INT pin is used as flag, the other interrupt event should be disabled. Usually, the polling mode is used for ambient light sensor while INT is used as flag of proximity sensing.

Interrupt mode

INT is treated as interrupt signal when INT_PS[2:0] other than flag mode are selected. In these modes, the other interrupt source can share the same INT pin to issue the interrupt event to host.

Out-of-Threshold interrupt mode

While INT_PS[2:0] is set to 3'b101/3'b110/3'b111, it is so-called "out-of-threshold interrupt". This interrupt scheme will issue continuous interrupt while the PS_DATA is higher or lower the threshold defined by THDH_PS[15:0] / THDL_PS[15:0].

Recommended interrupt mode

The INT_PS[2:0] = 3'b001 is a new scheme which reduces the software's effort. The INT is asserted only when proximity state (FLG_NF) is transient. Host just needs to handle the proximity sensor while INT is asserted and no extra handling for interrupt.

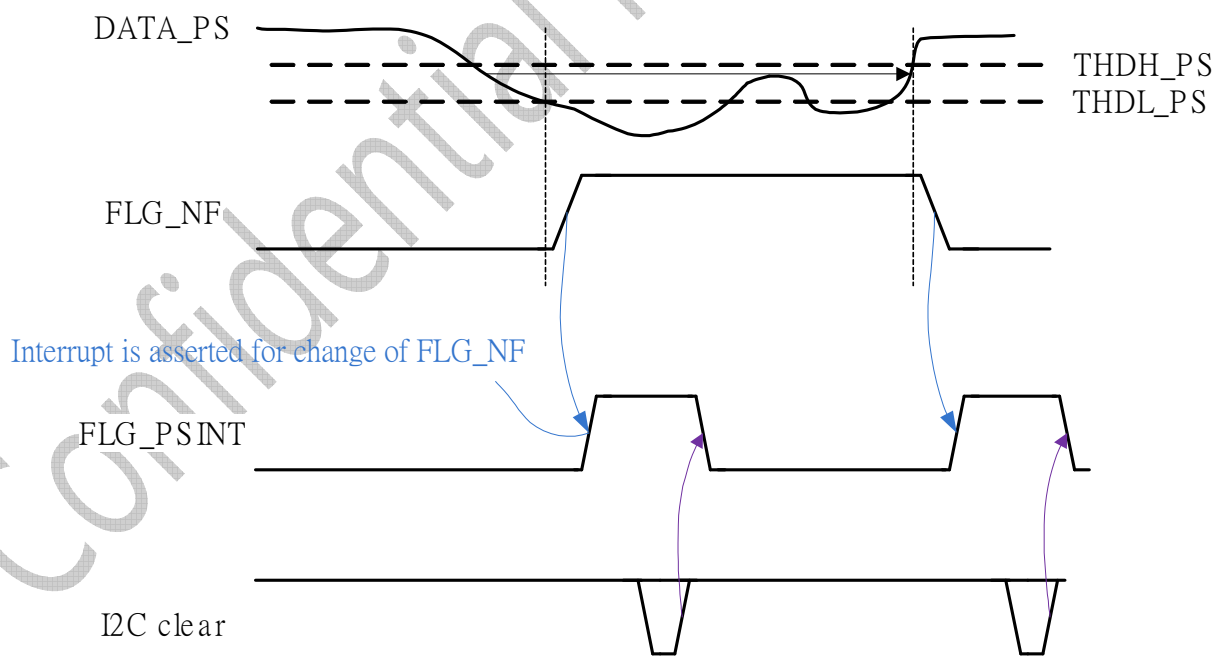

Confidential for SAMSUNG

 @copyright 2015 Sensortek Technology Corp.

Compatible interrupt mode

While INT_PS[2:0] = 3'b100, the interrupt mode is compatible with STK3171, STK3101 and STK3128. System pre-defined sequence is used to assert interrupt signal. Refer to the following state diagram.

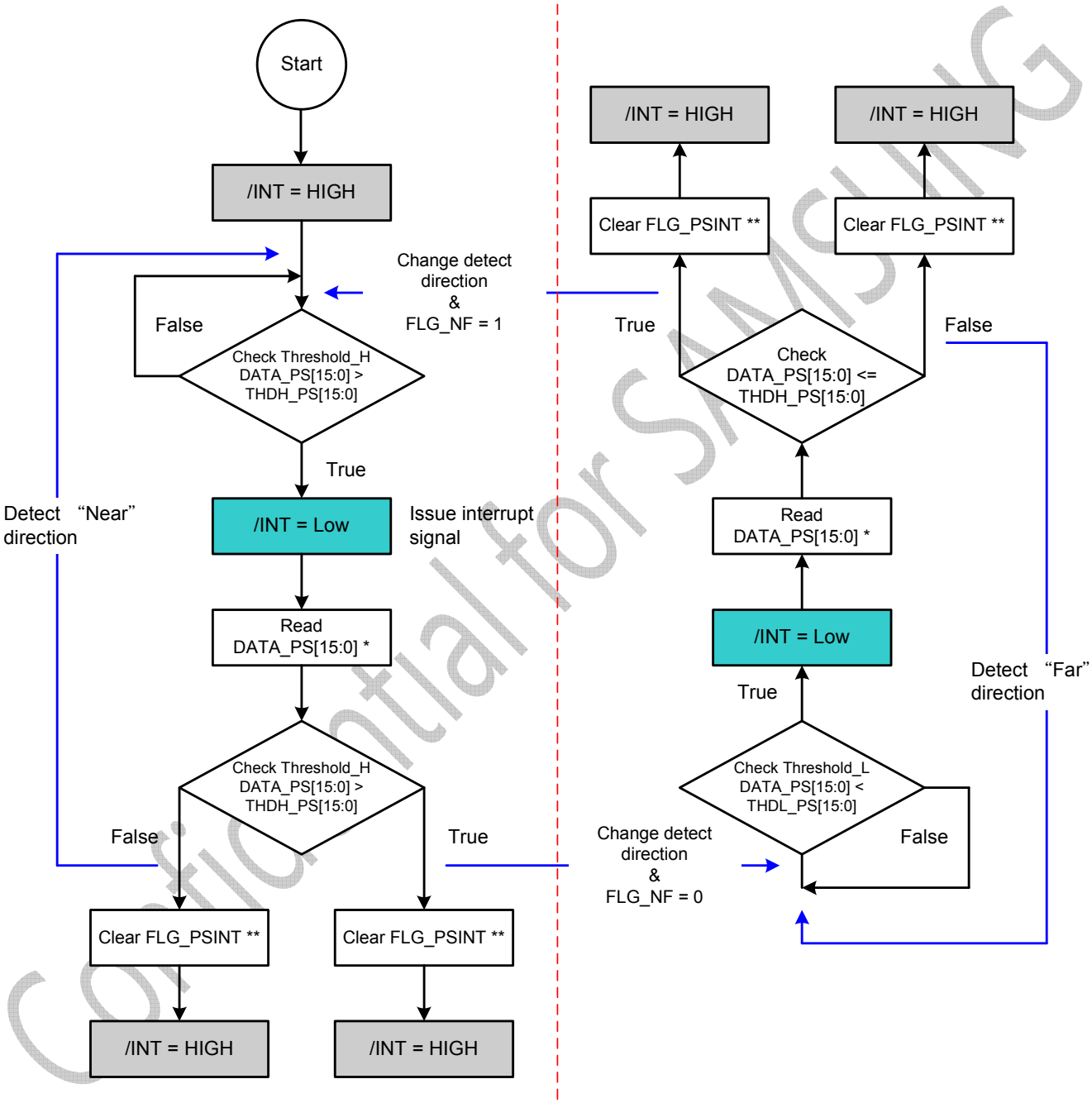

Confidential for SAMSUNG

Note : * read DATA_PS is driver's behavior and it will trigger IC's next action.
** clear FLG_PSINT is driver's behavior and it will let INT pin = HIGH

 @copyright 2015 Sensortek Technology Corp.

WAIT Register (05h)

2. WAIT[7:0] (Bit[7:0]) :
The wait time among every PS operation can be adjusted via I^2C. The following table lists the possible values of wait time.

BIT [7:0]	WAIT TIME
00h	5.93 ms; wait time among every PS operation is 5.93 ms
01h	11.9 ms; wait time among every PS operation is 11.9 ms
02h	17.8 ms; wait time among every PS operation is 17.8 ms
…….	…….
FFh	1518 ms; wait time among every PS operation is 1518 ms

PS Threshold Register (06h, 07h, 08h ,09h)

A proximity interrupt event (FLG_PSINT) is governed by the high and low thresholds in register 06h, 07h, 08h and 09h respectively. The user write a high and low threshold value to these registers and the STK3013 will issue an PS interrupt depends on setting of INT_PS[2:0].

FLAG Register (10h)

2. FLG_NF (Bit[0]) :
The definition of FLG_NF depends on the setting of INT_PS[2:0].

INT_PS[2:0]	FLG_NF
000	Unused. FLG_NF is fixed to 1.
001	FLG_NF is 0 if object in near to sensor and FLG_NF is 1 if object is far to sensor. Refer to INT_PS[2:0] = 3'b001 in previous description.
010	FLG_NF is 0 if object in near to sensor and FLG_NF is 1 if object is far to sensor.
011	FLG_NF is 0 if object in near to sensor and FLG_NF is 1 if object is far to sensor.
100	FLG_NF is 0 if STK3013 detection direction is object move from near side to far side. FLG_NF is 1 if STK3013 detection direction is object move from far side to near side.
101	Unused. FLG_NF is fixed to 1.
110	Unused. FLG_NF is fixed to 1.
111	Unused. FLG_NF is fixed to 1.

2. FLG_PSINT (Bit[4]) :
PS Interrupt flag. This is the status bit of the interrupt for PS. The bit is set to logic high when the interrupt thresholds have been triggered, and logic low when not yet triggered. Once triggered, INT pin stays low and the status bit stays high. Both interrupt pin and the status bit are cleared by writing "0".

BIT 4	OPERATION
0	Interrupt is cleared or not triggered yet
1	Interrupt is triggered

1. FLG_PSDR (Bit[6]) :
PS Data Ready Flag. This flag is used to confirm whether the PS data in the PS data registers are read or not. The bit will be 1 when the refreshed data is not read. The bit is automatically cleared to zero by STK3013 after the PS data registers are read.

PS Data Register (11 and 12 hex)

The STK3013 has two 8-bit read-only registers to hold the data from ADC of PS. The most significant bit (MSB) is accessed at register 11h, and the least significant bit (LSB) is accessed at register 12h. For 16-bit resolution, the data is from DATA_PS[15:0]. The registers are updated for every PS refresh time (conversion cycle).

Confidential for SAMSUNG

 @copyright 2015 Sensortek Technology Corp.

Data Offset Register (15h and 16h)
Please refer to the description in state register (00h).

Product ID (3Eh)
Read Only; PDT_ID = Product ID to indicate the product information.

Reserved (3Fh)
Read Only; RSRVD = Reserved for engineering mode.

Soft reset (80h)
Write any data to this register will reset the chip.

Confidential for SAMSUNG

 @copyright 2015 Sensortek Technology Corp.

7. PROXIMITY CHARACTERISTIC

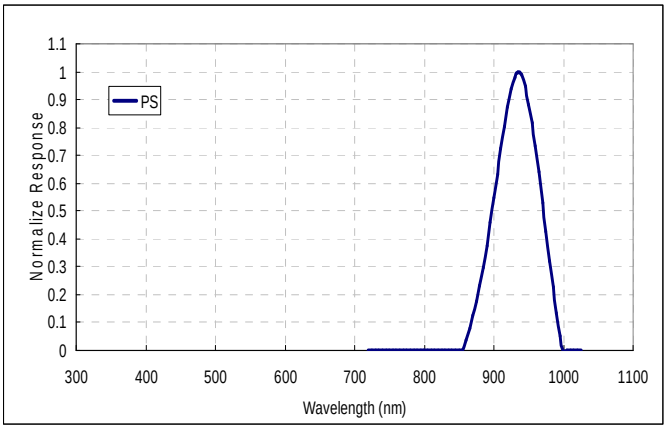

Spectral Response

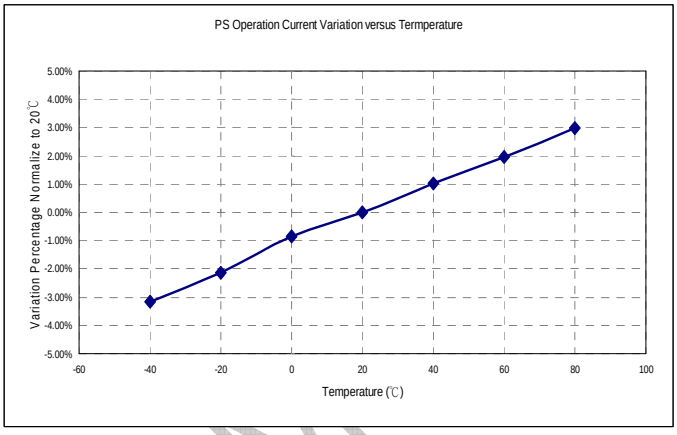

PS I_{ACT} Variation versus Temperature @ VDD = 2.8V, LED Driver Current = 100mA, PS-IT = 370us

Confidential for SAM

 @copyright 2015 Sensortek Technology Corp.

8. APPLICATION NOTE

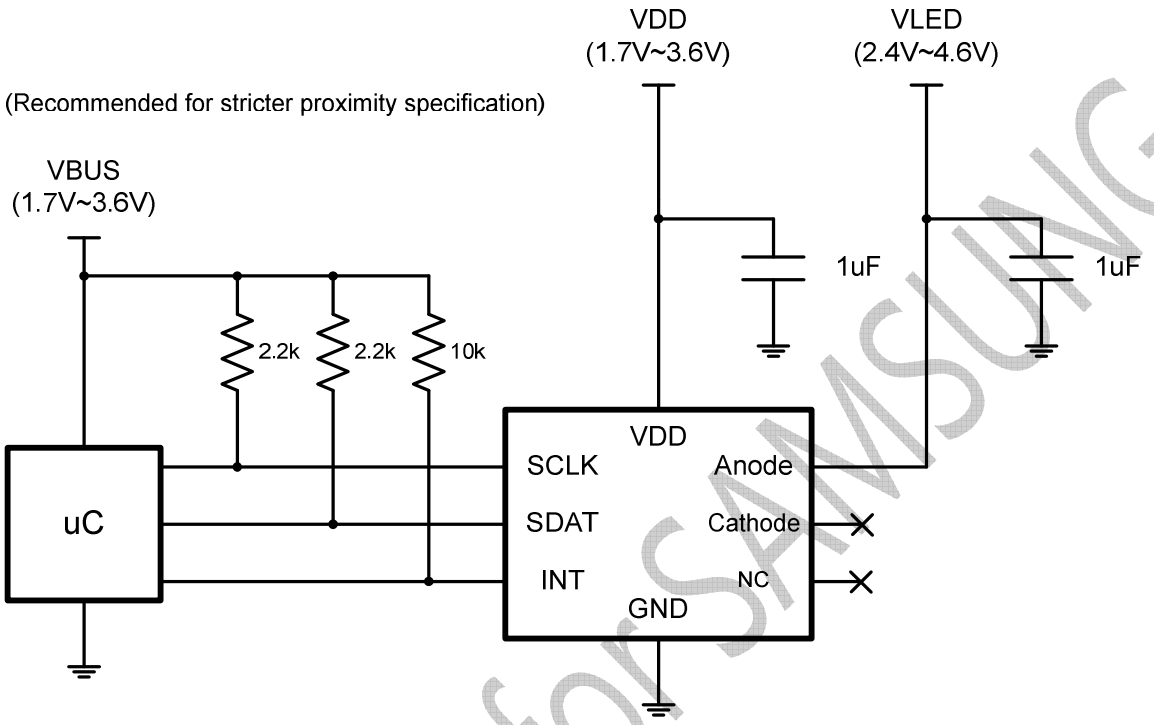

STK3013 Typical Application Circuit with Independent VDD and VLED Supply Voltage

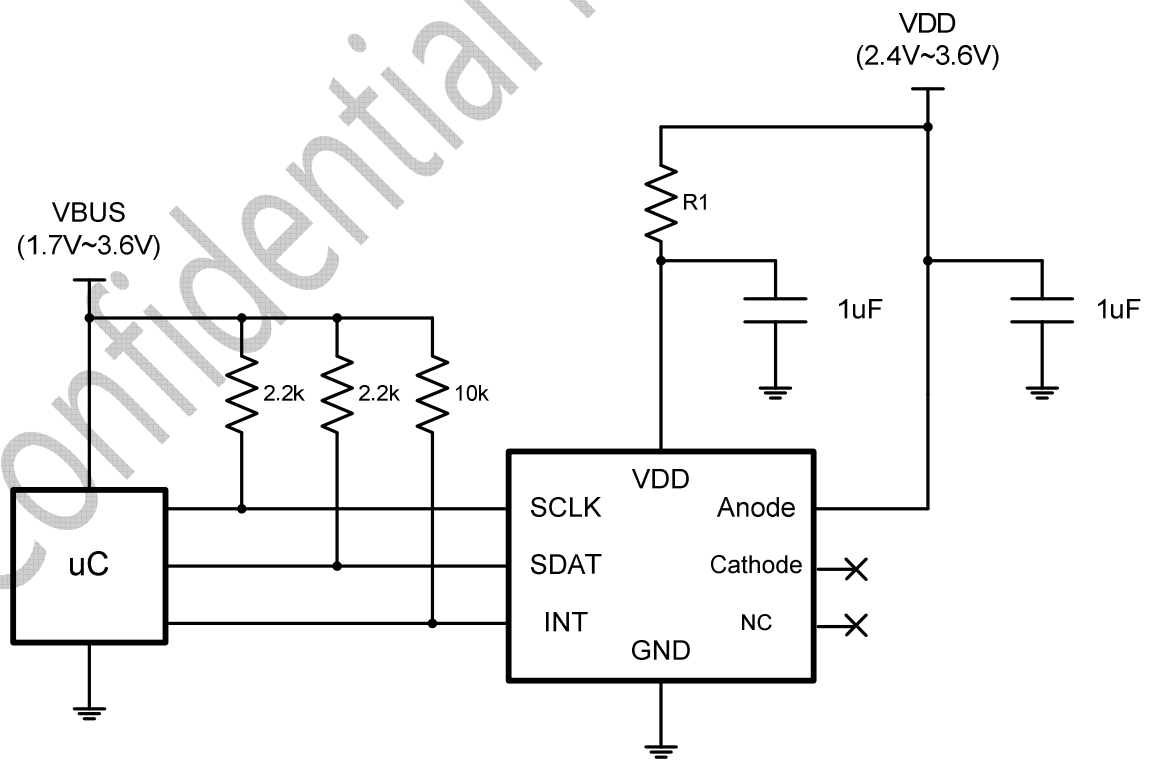

STK3013 Typical Application Circuit with Only One Supply Voltage

Confidential for SAMSUNG

 @copyright 2015 Sensortek Technology Corp.

8.1 Power Noise Consideration

In order to reduce the switching noise come from the VLED, it is suggested that IC power and VLED comes from individual source to get the best performance of STK3013. If IC power and VLED must be tied together due to system consideration, an R/C low pass filter should be added in the VDD path of STK3013 to reduce the switching noise from VLED. The recommended R1 value is 22 Ohm.

Confidential for SAMSUNG

 @copyright 2015 Sensortek Technology Corp.

9. PACKAGE OUTLINE

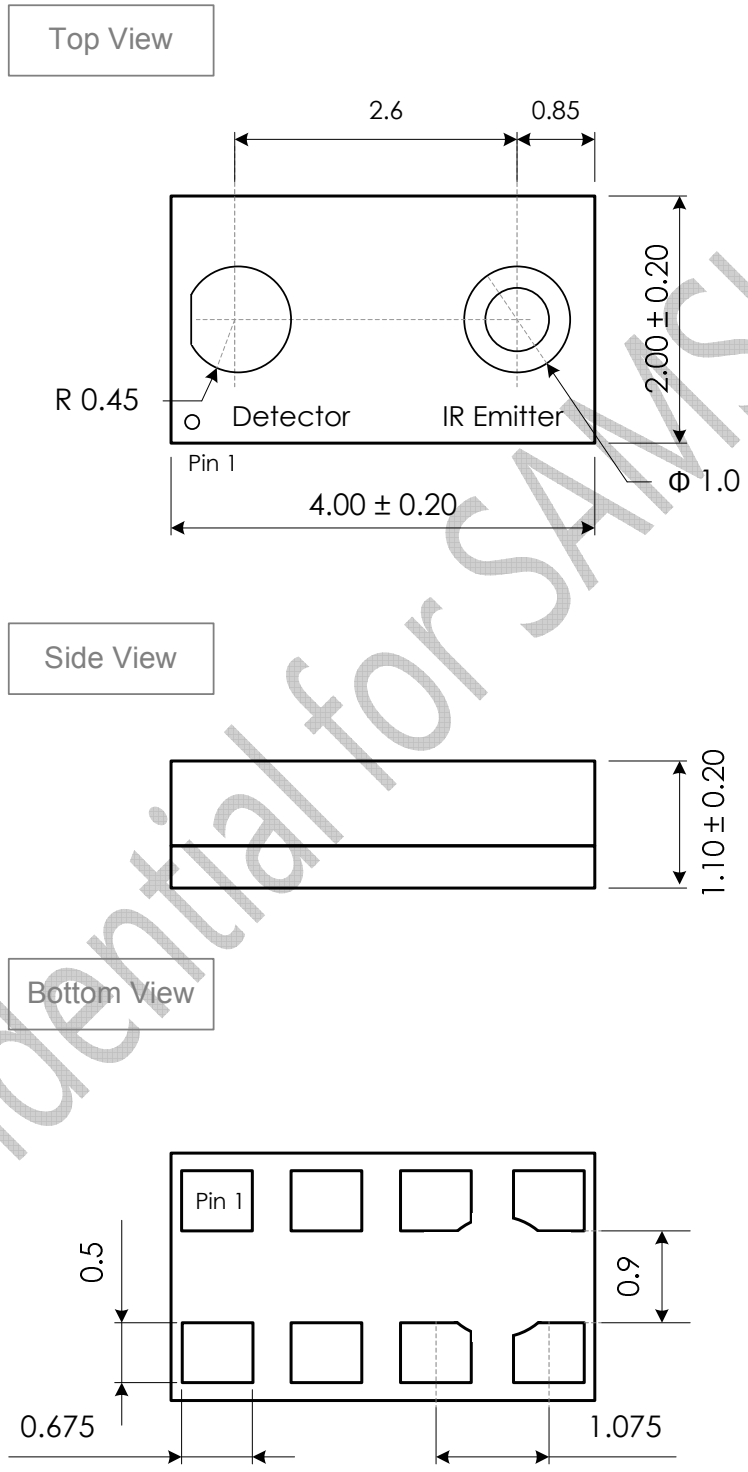

Dimension in Millimeters (mm)

Confidential for SAMSUNG

 @copyright 2015 Sensortek Technology Corp.

PCB Pad Layout

Suggested PCB pad layout guidelines for the Dual Flat No-Lead surface mount package are shown below.

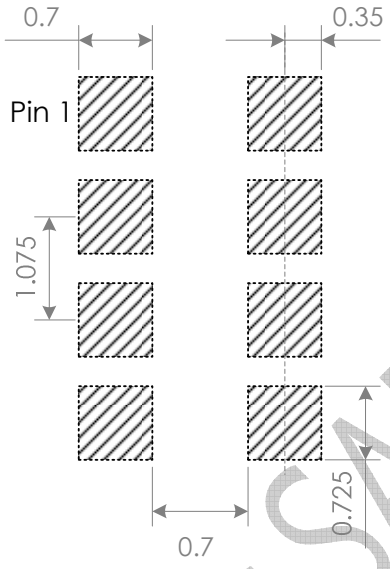

Notes: all linear dimensions are in mm.

Confidential for SAMSUNG

 @copyright 2015 Sensortek Technology Corp.

10. SOLDERING INFORMATION

10.1 Soldering Condition

1. Pb-free solder temperature profile

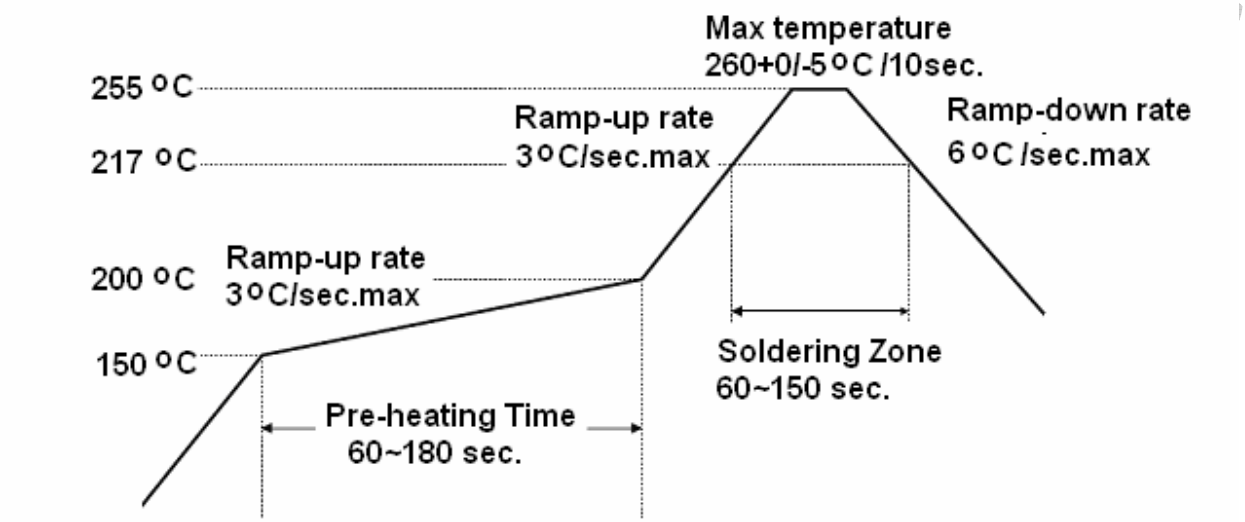

2. Reflow soldering should not be done more than three times.
3. When soldering, do not put stress on the Ics during heating.
4. After soldering, do not warp the circuit board.

10.2 Soldering Iron

Each terminal is to go to the tip of soldering iron temperature less than 350℃ for 3 seconds within once in less than the soldering iron capacity 25W. Leave two seconds and more intervals, and do soldering of each terminal. Be careful because the damage of the product is often started at the time of the hand solder.

10.3 Repairing

Repair should not be done after the Ics have been soldered. When repairing is unavoidable, a double-head soldering iron should be used (as below figure). It should be confirmed beforehand whether the characteristics of the Ics will or will not be damaged by repairing.

Confidential

 @copyright 2015 Sensortek Technology Corp.

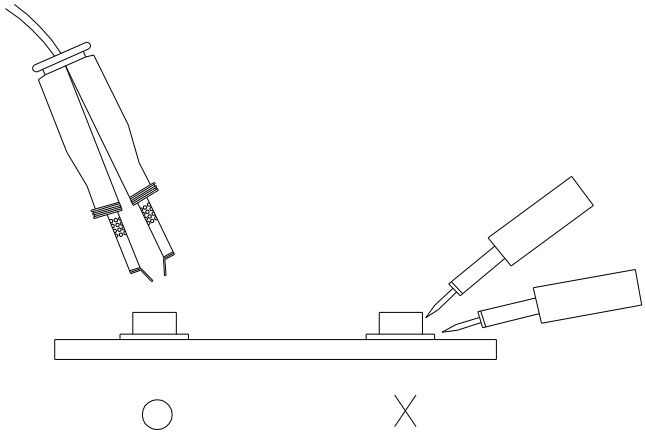

11. STORAGE INFORMATION

11.1 Storage Condition

1. Devices are packed in moisture barrier bags (MBB) to prevent the products from moisture absorption during transportation and storage. Each bag contains a desiccant.
2. The delivery product should be stored with the conditions shown below:

Storage Temperature	-40 to 85℃
Relatively Humidity	below 60%RH

11.2 Treatment After Unsealed

1. Floor life (time between soldering and removing from MBB) must not exceed the time shown below:

Floor Life	168 Hours
Storage Temperature	10 to 30℃
Relatively Humidity	below 60%RH

2. When the floor life limits have been exceeded or the devices are not stored in dry conditions, they must be re-baked before reflow to prevent damage to the devices. The recommended conditions are shown below

Temperature	60℃
Re-Baking Time	12 Hours

Confidential for SAMSUNG

 @copyright 2015 Sensortek Technology Corp.

Revision History

Date	Version	Modified Items
2015/02/02	1.0	Initial release.
2015/03/03	1.1	1. Package dimension tolerance changed. 2. Modify the PCB footprint.
2015/03/27	1.2	1. POD modify. 2. Storage temperature modify.
2015/05/18	1.3	Fix register default value typo
2015/05/20	1.4	Add the function description when fix offset cancel is used.

Confidential for SAMSUNG

Important Notice

This document contains information that is proprietary to Sensortek Technology Corp. ("sensortek"), and is subject to change without notice. Any part of this document may not be used, reproduced, duplicated or disclosed in any form or any means without the prior written permission of sensortek.

Sensortek does not warrant or represent that any license, either express or implied, is granted under any sensortek's patent right, copyright, mask work right, or other intellectual property right relating to any combination, machine, or process in which sensortek 's products or services are used. In addition, Sensortek does not assume any liability for the occurrence of infringing on any patent or other intellectual property rights of a third party.

Sensortek reserves the right to make corrections, modifications, enhancements, improvements, and other changes to its products and services at any time and to discontinue any product or service without notice. Customers should obtain the latest relevant information before placing orders and should verify that such information is current and complete.

 @copyright 2015 Sensortek Technology Corp.