SOD4001-SH thru SOD4007-SH

Surface Mount Glass Passivated Junction Rectifiers

Reverse Voltage 50 to 1000V Forward Current 1.0A

FEATURES

* Plastic package has Underwriters Laboratory Flammability Classification 94V-0
* High temperature metallurgically bonded construction
* Cavity-free glass passivated junction
* Capable of meeting environmental standards of MIL-S-19500
* 1.0 A operation at TA=75°C with no thermal runaway
* Typical IR less than 1.0μA
* High temperature soldering guaranteed: 260°C/10 seconds

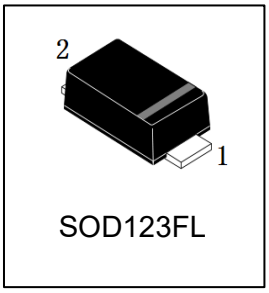



Mechanical Data

Case: JEDEC SOD123-FL/MINI SMA, molded plastic over glass DIE

Terminals: Tin Plated, solderable per MIL-STD-750, Method 2026

Polarity: Color band denotes cathode end

Mounting Position Any

Weight: 0.0155 g

Handling precautin:None

We declare that the material of product is Haloggen free (green epoxy compound)

Electrical Characteristic

1.Maximum & Thermal Characteristics Ratings at 25°C ambient temperature unless otherwise specified.

Parameter Symbol	symbol	SOD 4001-SH	SOD 4002-SH	SOD 4003-SH	SOD 4004-SH	SOD 4005-SH	SOD 4006-SH	SOD 4007-SH	Unit
Device marking code		A1	A2	A3	A4	A5	A6	A7	
Maximum repetitive peak reverse voltage	V_{RRM}	50	100	200	400	600	800	1000	V
Maximum RMS voltage	V_{RMS}	35	70	140	280	420	560	700	V
Maximum DC blocking voltage	V_{DC}	50	100	200	400	600	800	1000	V
Maximum average forward rectified current lead length at T_C = 75°C(Note 1)	$I_{F(AV)}$	1.0							A
Peak forward surge current 8.3ms single half sine-wave superimposed on rated load (JEDEC Method)	I_{FSM}	30							A
Reverse surger current(20mS)	I_{RSM}	18							mA
Power Dissipation	P_D	1							W
Typical thermal resistance (Note 1)	$R\theta J_A$ $R\theta J_L$	170 40							°C/W
Operating junction temperature range	T_J	–55 to +150							°C
storage temperature range	T_{STG}	–55 to +150							°C

Electrical Characteristics Ratings at 25°C ambient temperature unless otherwise specified.

Parameter Symbol	symbol	SOD 4001-SH	SOD 4002-SH	SOD 4003-SH	SOD 4004-SH	SOD 4005-SH	SOD 4006-SH	SOD 4007-SH	Unit
Maximum instantaneous forward voltage at 1.0A	V_F	1.1							V
Maximum DC reverse current TJ= 25°C at rated DC blocking voltage TJ = 125°C	IR	5.0 50							μA
Typical junction capacitance at 4.0V, 1MHz	C_J	15.0							PF

NOTES:

1. 8.0mm2 (.013mm thick) land areas

SOD4001-SH thru SOD4007-SH

2.Ratings and Characteristic Curves (TA = 25°C unless otherwise noted)

Fig. 1 – Forward Current Derating Curve

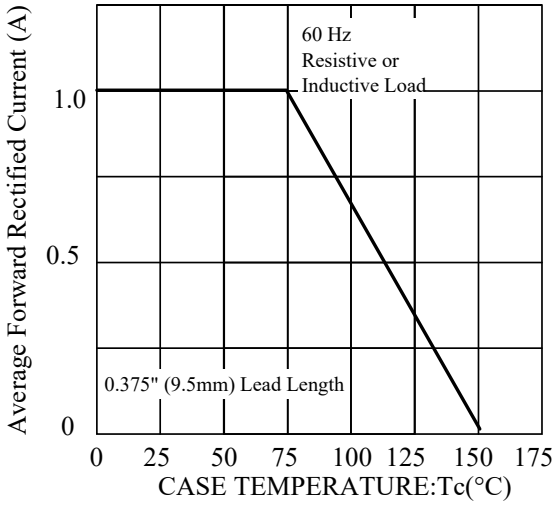

Fig. 2 – Maximum Non-repetitive Peak Forward Surge Current

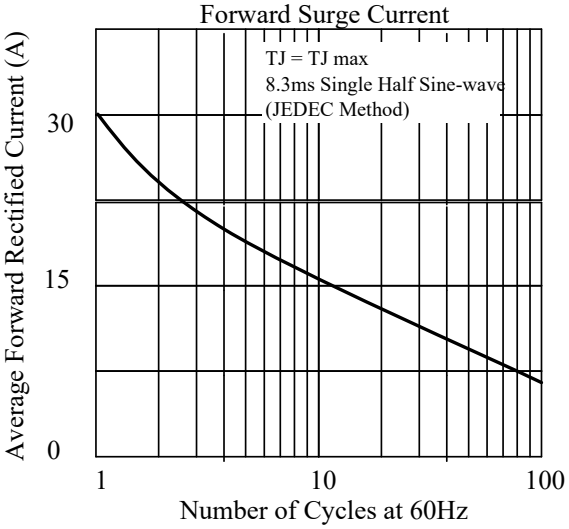

Fig 3. – Typical Instantaneous Forward Characteristics

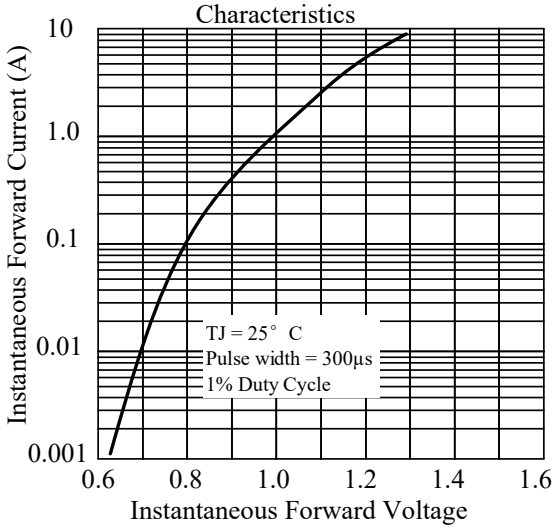

Fig 4. – Typical Reverse Characteristics

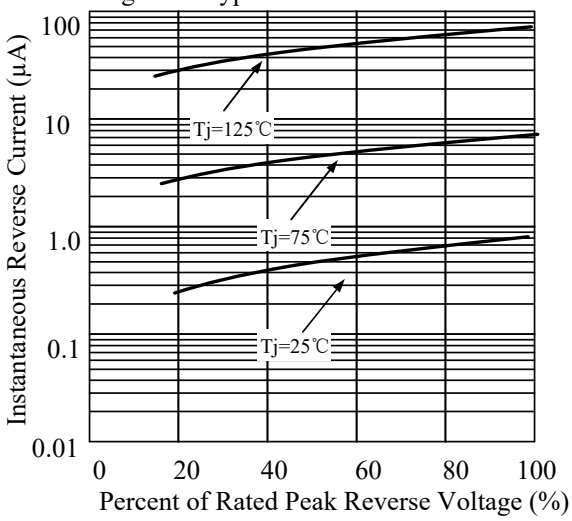

Fig 5. – typical transient thermal impedance

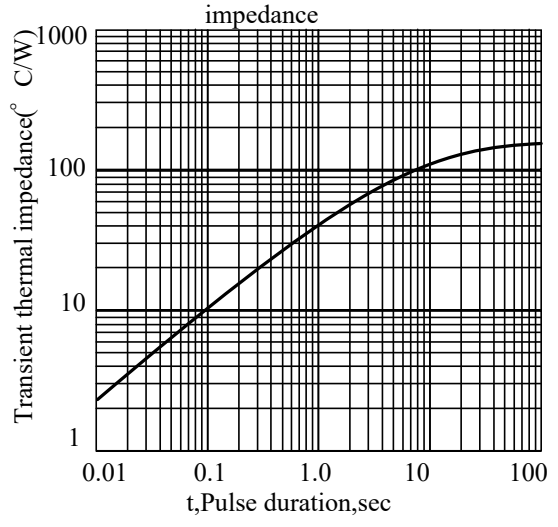

Fig 6. – Typical Junction Capacitance

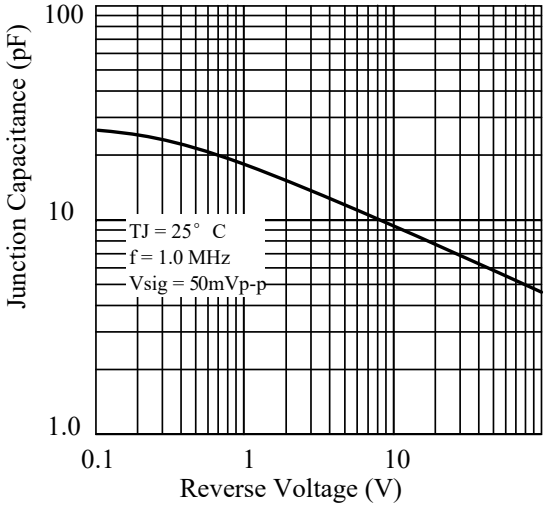

3.OUTLINE AND DIMENSIONS

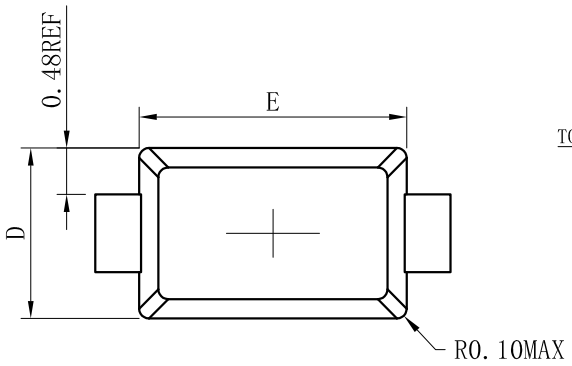

TOP VIEW

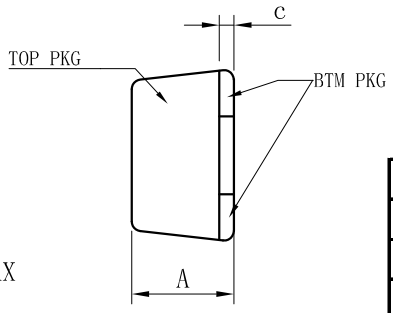

SIDE VIEW

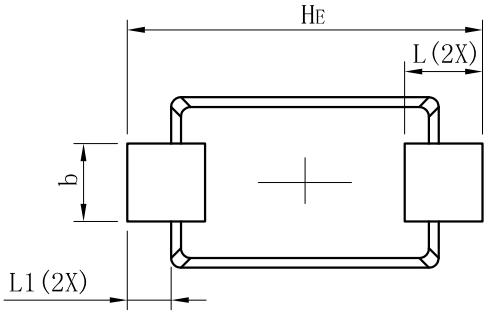

BOTTOM VIEW

SOD123FL			
DIM	MIN	NOR	MAX
A	0.90	1.05	1.15
b	0.75	0.80	0.95
L	0.50	0.80	1.10
E	2.60	2.75	2.90
D	1.60	1.75	1.90
HE	3.50	3.65	3.80
c	0.12	0.17	0.22
L1	0.25	0.45	0.65
All Dimensions in mm			

GENERAL NOTES

1. Top package surface finish Ra0.4±0.2um
2. Bottom package surface finish Ra0.7±0.2um
3. Side package surface finish Ra0.4±0.2um

4.SOLDERING FOOTPRINT

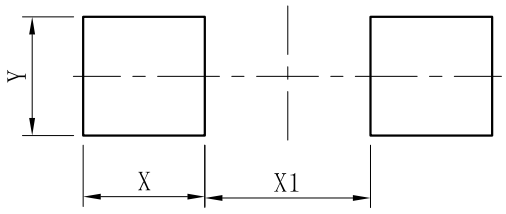

DIM	(mm)
X	1.20
Y	1.10
X1	2.00

DISCLAIMER

- Curve guarantee in the specification. The curve of test items with electric parameter is used as quality guarantee. The curve of test items without electric parameter is used as reference only.

- Before you use our Products for new Project, you are requested to carefully read this document and fully under--stand its contents. LRC shall not be in any way responsible or liable for failure, malfunction or accident arising from the use of any LRC’s Products against warning, caution or note contained in this document.

- All information contained in this document is current as of the issuing date and subject to change without any prior notice. Before purchasing or using LRC's Products,please confirm the latest information with a LRC sales represe--ntative.