SN74LVC2T45 具有可配置电压转换的双位双电源总线收发器

1 特性

- 完全可配置的双轨设计，支持各个端口在 1.65V 至 5.5V 的整个电源电压范围内运行
- V_{CC} 隔离特性 – 如果任何一个 V_{CC} 输入接地 (GND)，则两个端口均处于高阻抗状态
- 以 V_{CCA} 为基准的 DIR 输入电路
- 低功耗，I_{CC} 最大值为 4 µA
- 采用德州仪器 (TI) NanoFree™ 封装
- 电压为 3.3V 时，输出驱动为 ±24mA
- I_{off} 支持部分断电模式运行
- 最大数据速率：
  - 420Mbps（3.3V 至 5V 转换）
  - 210Mbps（转换至 3.3 V）
  - 140Mbps（转换至 2.5 V）
  - 75Mbps（转换至 1.8 V）
- 闩锁性能超过 100mA，符合 JESD 78 II 类规范
- ESD 保护性能超过 JESD 22 规范要求
  - 4000V 人体放电模式 (A114-A)
  - 200V 机器放电模型 (A115-A)
  - 1000V 带电器件模型 (C101)

2 应用

- 个人电子产品
- 工业
- 企业
- 电信

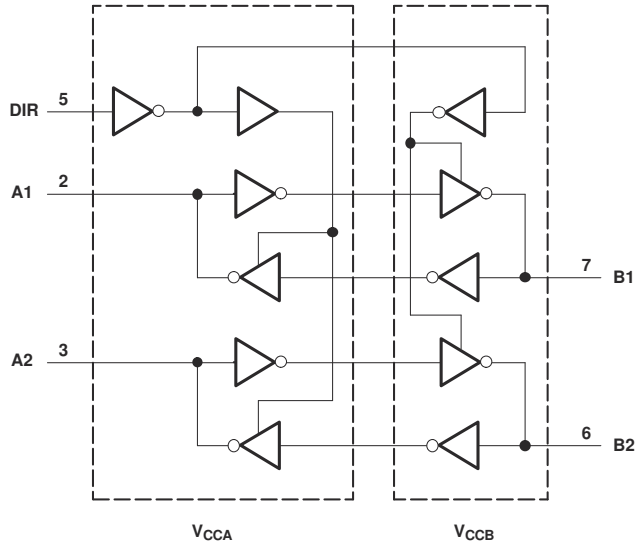

功能方框图

3 说明

这款 2 位同相总线收发器使用两个独立的可配置电源轨。A 端口旨在跟踪 V_{CCA}。V_{CCA} 可接受从 1.65V 到 5.5V 范围内的任意电源电压。B 端口旨在跟踪 V_{CCB}。V_{CCB} 可接受从 1.65 至 5.5V 间的任一电源电压值。这可实现 1.8V，2.5V，3.3V 和 5V 电压节点间的通用低压双向转换。

SN74LVC2T45 旨在实现两条数据总线间的异步通信。方向控制 (DIR) 输入的逻辑电平将会激活 B 端口或 A 端口输出。当 B 端口输出被激活时，此器件将数据从 A 总线发送到 B 总线，而当 A 端口输出被激活时，此器件将数据从 B 总线发送到 A 总线。A 端口和 B 端口上的输入电路一直处于激活状态，并且必须施加一个逻辑高或低电平，从而防止过大的 I_{CC} 和 I_{CCZ}。

SN74LVC2T45 设计为由 V_{CCA} 为 DIR 输入电路供电。该器件完全符合使用 I_{off} 的部分断电应用的规范要求。I_{off} 电路禁用输出，从而可防止其断电时破坏性电流从该器件回流。

V_{CC} 隔离特性可确保只要有任何一个 V_{CC} 输入接地 (GND)，则两个端口均处于高阻抗状态。

封装信息(1)

器件型号	封装	封装尺寸（标称值）
SN74LVC2T45	DCT（SM8，8）	2.95mm × 2.80mm
	DCU（VSSOP，8）	2.30mm × 2.00mm
	YZP（DSBGA，8）	1.89 mm × 0.89 mm

(1) 如需了解所有可用封装，请参阅数据表末尾的可订购产品附录。

本文档旨在为方便起见，提供有关 TI 产品中文版本的信息，以确认产品的概要。有关适用的官方英文版本的最新信息，请访问 www.ti.com，其内容始终优先。TI 不保证翻译的准确性和有效性。在实际设计之前，请务必参考最新版本的英文版本。

Table of Contents

1 特性.....1
2 应用.....1
3 说明.....1
4 Revision History.....2
5 Pin Configuration and Functions.....3
6 Specifications.....4
6.1 Absolute Maximum Ratings.....4
6.2 ESD Ratings.....4
6.3 Recommended Operating Conditions.....4
6.4 Thermal Information.....5
6.5 Electrical Characteristics.....6
6.6 Switching Characteristics: V_{CCA} = 1.8 V ± 0.15 V.....7
6.7 Switching Characteristics: V_{CCA} = 2.5 V ± 0.2 V.....7
6.8 Switching Characteristics: V_{CCA} = 3.3 V ± 0.3 V.....8
6.9 Switching Characteristics: V_{CCA} = 5 V ± 0.5 V.....8
6.10 Operating Characteristics.....9
6.11 Typical Characteristics.....10
7 Parameter Measurement Information.....13
8 Detailed Description.....14
8.1 Overview.....14
8.2 Functional Block Diagram.....14
8.3 Feature Description.....14
8.4 Device Functional Modes.....15
9 Application and Implementation.....16
9.1 Application Information.....16
9.2 Typical Applications.....16
10 Power Supply Recommendations.....20
10.1 Power-Up Considerations.....20
11 Layout.....21
11.1 Layout Guidelines.....21
11.2 Layout Example.....21
12 Device and Documentation Support.....22
12.1 Documentation Support.....22
12.2 接收文档更新通知.....22
12.3 支持资源.....22
12.4 Trademarks.....22
12.5 Electrostatic Discharge Caution.....22
12.6 术语表.....22
13 Mechanical, Packaging, and Orderable Information.....22

4 Revision History

注：以前版本的页码可能与当前版本的页码不同

Changes from Revision L (October 2022) to Revision M (October 2022) — **Page**

- Changed the *T_A operating free-air temperature* back to *85°C* 4

Changes from Revision K (June 2017) to Revision L (October 2022) — **Page**

- Updated the thermals in the *Thermal Information* section.....5
- Extended the minimum specifications for lower delays in the *Switching Characteristics* sections.....7

Changes from Revision J (October 2014) to Revision K (June 2017) — **Page**

- 更改了数据表标题.....1
- Added Junction temperature, T_J in *Absolute Maximum Ratings* 4

Changes from Revision I (March 2007) to Revision J (October 2014) — **Page**

- 添加了 *引脚配置和功能* 部分、*ESD 等级* 表、*特性说明* 部分、*器件功能模式*、*应用和实现* 部分、*电源相关建议* 部分、*布局* 部分、*器件和文档支持* 部分以及 *机械、封装和可订购信息* 部分.....1

Copyright © 2022 Texas Instruments Incorporated

5 Pin Configuration and Functions

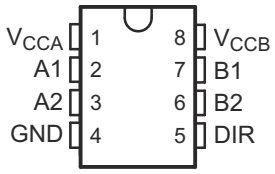

图 5-1. DCT or DCU Package, 8-Pin SM8 or VSSOP (Top View)

表 5-1. Pin Functions: DCT, DCU

PIN		TYPE(1)	DESCRIPTION
NAME	NO.		
V_{CCA}	1	P	A-port supply voltage. 1.65 V ⩽ V_{CCA} ⩽ 5.5 V
A1	2	I/O	Input/output A1. Referenced to V_{CCA}
A2	3	I/O	Input/output A2. Referenced to V_{CCA}
GND	4	G	Ground
DIR	5	I	Direction control signal
B2	6	I/O	Input/output B2. Referenced to V_{CCB}
B1	7	I/O	Input/output B1. Referenced to V_{CCB}
V_{CCB}	8	P	B-port supply voltage. 1.65 V ⩽ V_{CCB} ⩽ 5.5 V

(1) I = input, O = output, P = power, G =ground

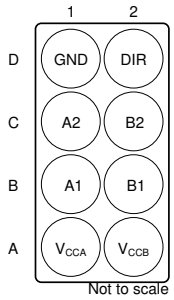

图 5-2. YZP Package, 8-Pin DSGBA (Bottom View)

表 5-2. Pin Functions: YZP

PIN		TYPE(1)	DESCRIPTION
NO.	NAME		
A1	V_{CCA}	P	A-port supply voltage. 1.65 V ⩽ V_{CCA} ⩽ 5.5 V
A2	V_{CCB}	P	B-port supply voltage. 1.65 V ⩽ V_{CCB} ⩽ 5.5 V
B1	A1	I/O	Input/output A1. Referenced to V_{CCA}
B2	B1	I/O	Input/output B1. Referenced to V_{CCB}
C1	A2	I/O	Input/output A2. Referenced to V_{CCA}
C2	B2	I/O	Input/output B2. Referenced to V_{CCB}
D1	GND	G	Ground
D2	DIR	I	Direction control signal

(1) I = input, O = output, P = power, G = ground

Copyright © 2022 Texas Instruments Incorporated

6 Specifications

6.1 Absolute Maximum Ratings

over operating free-air temperature range (unless otherwise noted)(1)

			MIN	MAX	UNIT
V_{CCA} / V_{CCB}	Supply voltage		–0.5	6.5	V
V_I	Input voltage(2)		–0.5	6.5	V
V_O	Voltage range applied to any output in the high-impedance or power-off state(2)		–0.5	6.5	V
V_O	Voltage range applied to any output in the high or low state(2) (3)	A port	–0.5	V_{CCA} + 0.5	V
		B port	–0.5	V_{CCB} + 0.5	
I_{IK}	Input clamp current	V_I < 0	–50		mA
I_{OK}	Output clamp current	V_O < 0	–50		mA
I_O	Continuous output current		–50	50	mA
	Continuous current through V_{CC} or GND		–100	100	mA
T_J	Junction temperature			150	°C
T_{stg}	Storage temperature		–65	150	°C

(1) Stresses beyond those listed under *Absolute Maximum Ratings* may cause permanent damage to the device. These are stress ratings only, which do not imply functional operation of the device at these or any other conditions beyond those indicated under *Recommended Operating Conditions*. Exposure to absolute-maximum-rated conditions for extended periods may affect device reliability.
(2) The input and output negative-voltage ratings may be exceeded if the input and output clamp-current ratings are observed.
(3) The value of V_{CC} is provided in the recommended operating conditions table.

6.2 ESD Ratings

			VALUE	UNIT
$V_{(ESD)}$	Electrostatic discharge	Human body model (HBM), per ANSI/ESDA/JEDEC JS-001(1)	±4000	V
		Charged device model (CDM), per ANSI/ESDA/JEDEC JS-002 (2)	±1000	

(1) JEDEC document JEP155 states that 500-V HBM allows safe manufacturing with a standard ESD control process.
(2) JEDEC document JEP157 states that 250-V CDM allows safe manufacturing with a standard ESD control process.

6.3 Recommended Operating Conditions

over operating free-air temperature range (unless otherwise noted)(1) (2) (3)

			V_{CCI}	V_{CCO}	MIN	MAX	UNIT
V_{CCA} / V_{CCB}	Supply voltage				1.65	5.5	V
					1.65	5.5	
V_{IH}	High-level input voltage	Data inputs(4)	1.65 V to 1.95 V		V_{CCI} × 0.65		V
			2.3 V to 2.7 V		1.7		
			3 V to 3.6 V		2		
			4.5 V to 5.5 V		V_{CCI} × 0.7		
V_{IL}	Low-level input voltage	Data inputs(4)	1.65 V to 1.95 V			V_{CCI} × 0.35	V
			2.3 V to 2.7 V			0.7	
			3 V to 3.6 V			0.8	
			4.5 V to 5.5 V			V_{CCI} × 0.3	
V_{IH}	High-level input voltage	DIR (referenced to V_{CCA})(5)	1.65 V to 1.95 V		V_{CCA} × 0.65		V
			2.3 V to 2.7 V		1.7		
			3 V to 3.6 V		2		
			4.5 V to 5.5 V		V_{CCA} × 0.7		

Copyright © 2022 Texas Instruments Incorporated

6.3 Recommended Operating Conditions (continued)

over operating free-air temperature range (unless otherwise noted)(1) (2) (3)

			V_{CCI}	V_{CCO}	MIN	MAX	UNIT
V_{IL}	Low-level input voltage	DIR (referenced to V_{CCA})(5)	1.65 V to 1.95 V			V_{CCA} × 0.35	V
			2.3 V to 2.7 V			0.7	
			3 V to 3.6 V			0.8	
			4.5 V to 5.5 V			V_{CCA} × 0.3	
V_I	Input voltage				0	5.5	V
V_O	Output voltage				0	V_{CCO}	V
I_{OH}	High-level output current			1.65 V to 1.95 V		–4	mA
				2.3 V to 2.7 V		–8	
				3 V to 3.6 V		–24	
				4.5 V to 5.5 V		–32	
I_{OL}	Low-level output current			1.65 V to 1.95 V		4	mA
				2.3 V to 2.7 V		8	
				3 V to 3.6 V		24	
				4.5 V to 5.5 V		32	
$\Delta t/\Delta v$	Input transition rise or fall rate	Data inputs	1.65 V to 1.95 V			20	ns/V
			2.3 V to 2.7 V			20	
			3 V to 3.6 V			10	
			4.5 V to 5.5 V			5	
		Control input	1.65 V to 5.5 V			5	
T_A	Operating free-air temperature				–40	85	°C

(1) V_{CCI} is the V_{CC} associated with the input port.
(2) V_{CCO} is the V_{CC} associated with the output port.
(3) All unused data inputs of the device must be held at V_{CCI} or GND to ensure proper device operation. See *Implications of Slow or Floating CMOS Inputs*, SCBA004.
(4) For V_{CCI} values not specified in the data sheet, V_{IH} min = V_{CCI} × 0.7 V, V_{IL} max = V_{CCI} × 0.3 V.
(5) For V_{CCI} values not specified in the data sheet, V_{IH} min = V_{CCA} × 0.7 V, V_{IL} max = V_{CCA} × 0.3 V.

6.4 Thermal Information

THERMAL METRIC(1)		SN74LVC2T45			UNIT
		DCU	DCT	YZP	
		8 PINS			
$R_{\theta JA}$	Junction-to-ambient thermal resistance	246.4	195.3	105.8	°C/W
$R_{\theta JC(top)}$	Junction-to-case (top) thermal resistance	95.4	106	1.6	°C/W
$R_{\theta JB}$	Junction-to-board thermal resistance	157.8	110.8	10.8	°C/W
ψ_{JT}	Junction-to-top characterization parameter	37	38.3	3.1	°C/W
ψ_{JB}	Junction-to-board characterization parameter	156.9	109.3	10.8	°C/W

(1) For more information about traditional and new thermal metrics, see the *Semiconductor and IC Package Thermal Metrics* application report.

Copyright © 2022 Texas Instruments Incorporated

6.5 Electrical Characteristics

over recommended operating free-air temperature range (unless otherwise noted)(1) (2)

PARAMETER		TEST CONDITIONS		V_{CCA}	V_{CCB}	T_A = 25°C			–40°C to +85°C		UNIT
						MIN	TYP	MAX	MIN	MAX	
V_{OH}		I_{OH} = –100 µA	$V_I = V_{IH}$	1.65 V to 4.5 V	1.65 V to 4.5 V				V_{CCO} – 0.1		V
		I_{OH} = –4 mA		1.65 V	1.65 V				1.2		
		I_{OH} = –8 mA		2.3 V	2.3 V				1.9		
		I_{OH} = –24 mA		3 V	3 V				2.4		
		I_{OH} = –32 mA		4.5 V	4.5 V				3.8		
V_{OL}		I_{OL} = 100 µA	$V_I = V_{IL}$	1.65 V to 4.5 V	1.65 V to 4.5 V					0.1	V
		I_{OL} = 4 mA		1.65 V	1.65 V					0.45	
		I_{OL} = 8 mA		2.3 V	2.3 V					0.3	
		I_{OL} = 24 mA		3 V	3 V					0.55	
		I_{OL} = 32 mA		4.5 V	4.5 V					0.55	
I_I	DIR	$V_I = V_{CCA}$ or GND		1.65 V to 5.5 V	1.65 V to 5.5 V			±1		±2	µA
I_{off}	A port	V_I or V_O = 0 to 5.5 V		0 V	0 to 5.5 V			±1		±2	µA
	B port			0 to 5.5 V	0 V			±1		±2	
I_{OZ}	A or B port	$V_O = V_{CCO}$ or GND		1.65 V to 5.5 V	1.65 V to 5.5 V			±1		±2	µA
I_{CCA}		$V_I = V_{CCI}$ or GND, I_O = 0		1.65 V to 5.5 V	1.65 V to 5.5 V					3	µA
				5 V	0 V					2	
				0 V	5 V					–2	
I_{CCB}		$V_I = V_{CCI}$ or GND, I_O = 0		1.65 V to 5.5 V	1.65 V to 5.5 V					3	µA
				5 V	0 V					–2	
				0 V	5 V					2	
$I_{CCA} + I_{CCB}$ (see 表 10-1)		$V_I = V_{CCI}$ or GND, I_O = 0		1.65 V to 5.5 V	1.65 V to 5.5 V					4	µA
ΔI_{CCA}	A port	One A port at V_{CCA} – 0.6 V, DIR at V_{CCA}, B port = open		3 V to 5.5 V	3 V to 5.5 V					50	µA
	DIR	DIR at V_{CCA} – 0.6 V, B port = open, A port at V_{CCA} or GND								50	
ΔI_{CCB}	B port	One B port at V_{CCB} – 0.6 V, DIR at GND, A port = open		3 V to 5.5 V	3 V to 5.5 V					50	µA
C_I	DIR	$V_I = V_{CCA}$ or GND		3.3 V	3.3 V		2.5				pF
C_{io}	A or B port	$V_O = V_{CCA/B}$ or GND		3.3 V	3.3 V		6				pF

(1) V_{CCO} is the V_{CC} associated with the output port.
(2) V_{CCI} is the V_{CC} associated with the input port.

Copyright © 2022 Texas Instruments Incorporated

6.6 Switching Characteristics: V_{CCA} = 1.8 V ± 0.15 V

over recommended operating free-air temperature range, V_{CCA} = 1.8 V ± 0.15 V (unless otherwise noted) (see 图 7-1)

PARAMETER	FROM (INPUT)	TO (OUTPUT)	V_{CCB} = 1.8 V ±0.15 V		V_{CCB} = 2.5 V ±0.2 V		V_{CCB} = 3.3 V ±0.3 V		V_{CCB} = 5 V ±0.5 V		UNIT
			MIN	MAX	MIN	MAX	MIN	MAX	MIN	MAX	
t_{PLH}	A	B	3	17.7	2.2	10.3	1.7	8.3	1.4	7.2	ns
t_{PHL}			2.8	14.3	2.2	8.5	1.8	7.1	1.7	7	
t_{PLH}	B	A	3	17.7	2.3	16	2.1	15.5	1.9	15.1	ns
t_{PHL}			2.8	14.3	2.1	12.9	2	12.6	1.8	12.2	
t_{PHZ}	DIR	A	5.5	30.9	5.5	30.5	5.5	30.5	5.5	29.3	ns
t_{PLZ}			4.3	19.7	4.2	19.6	4.1	19.5	4	19.4	
t_{PHZ}	DIR	B	6	27.9	5	14.9	5	11.3	4.1	8.6	ns
t_{PLZ}			5	19.5	3.9	12.6	4.3	9.7	2.1	7.1	
t_{PZH} (1)	DIR	A		37.2		28.6		25.2		22.2	ns
t_{PZL} (1)				42.2		27.8		23.9		20.8	
t_{PZH} (1)	DIR	B		37.4		29.9		27.8		26.6	ns
t_{PZL} (1)				45.2		39		37.6		36.3	

(1) The enable time is a calculated value, derived using the formula shown in the *Enable Times* section.

6.7 Switching Characteristics: V_{CCA} = 2.5 V ± 0.2 V

over recommended operating free-air temperature range, V_{CCA} = 2.5 V ± 0.2 V (unless otherwise noted) (see 图 7-1)

PARAMETER	FROM (INPUT)	TO (OUTPUT)	V_{CCB} = 1.8 V ±0.15 V		V_{CCB} = 2.5 V ±0.2 V		V_{CCB} = 3.3 V ±0.3 V		V_{CCB} = 5 V ±0.5 V		UNIT
			MIN	MAX	MIN	MAX	MIN	MAX	MIN	MAX	
t_{PLH}	A	B	2.3	16	1.5	8.5	1.3	6.4	1.1	5.1	ns
t_{PHL}			2.1	12.9	1.4	7.5	1.3	5.4	0.9	4.6	
t_{PLH}	B	A	2.2	10.3	1.5	8.5	1.4	8	1	7.5	ns
t_{PHL}			2.2	8.5	1.4	7.5	1.3	7	0.9	6.2	
t_{PHZ}	DIR	A	4.2	17.1	4.2	16.8	4.1	16.8	4.1	16.5	ns
t_{PLZ}			3.2	12.6	3.2	12.5	3.2	12.3	3	12.3	
t_{PHZ}	DIR	B	6	27.9	4.7	13.9	4.7	10.5	3.5	7.6	ns
t_{PLZ}			4.2	18.9	3.6	11.2	3.6	8.9	1.4	6.2	
t_{PZH} (1)	DIR	A		29.2		19.7		16.9		13.7	ns
t_{PZL} (1)				36.4		21.4		17.5		13.8	
t_{PZH} (1)	DIR	B		28.6		21		18.7		17.4	ns
t_{PZL} (1)				30		24.3		22.2		21.1	

(1) The enable time is a calculated value, derived using the formula shown in the *Enable Times* section.

Copyright © 2022 Texas Instruments Incorporated

6.8 Switching Characteristics: V_{CCA} = 3.3 V ± 0.3 V

over recommended operating free-air temperature range, V_{CCA} = 3.3 V ± 0.3 V (unless otherwise noted) (see 图 7-1)

PARAMETER	FROM (INPUT)	TO (OUTPUT)	V_{CCB} = 1.8 V ±0.15 V		V_{CCB} = 2.5 V ±0.2 V		V_{CCB} = 3.3 V ±0.3 V		V_{CCB} = 5 V ±0.5 V		UNIT
			MIN	MAX	MIN	MAX	MIN	MAX	MIN	MAX	
t_{PLH}	A	B	2.1	15.5	1.4	8	0.7	5.6	0.7	4.4	ns
t_{PHL}			2	12.6	1.3	7	0.8	5	0.7	4	
t_{PLH}	B	A	1.7	8.3	1.3	6.4	0.7	5.8	0.6	5.4	ns
t_{PHL}			1.8	7.1	1.3	5.4	0.8	5	0.7	4.5	
t_{PHZ}	DIR	A	4.5	10.9	4.5	10.8	4.4	10.8	4.4	10.4	ns
t_{PLZ}			3.4	8.4	3.7	8.4	3.9	8.1	3.3	7.8	
t_{PHZ}	DIR	B	5.7	27.3	4.7	13.7	4.7	10.4	2.9	7.4	ns
t_{PLZ}			4.5	17.7	3.5	11.3	4.3	8.3	1	5.6	
t_{PZH} (1)	DIR	A		26		17.7		14.1		11	ns
t_{PZL} (1)				34.4		19.1		15.4		11.9	
t_{PZH} (1)	DIR	B		23.9		16.4		13.9		12.2	ns
t_{PZL} (1)				23.5		17.8		15.8		14.4	

(1) The enable time is a calculated value, derived using the formula shown in the *Enable Times* section.

6.9 Switching Characteristics: V_{CCA} = 5 V ± 0.5 V

over recommended operating free-air temperature range, V_{CCA} = 5 V ± 0.5 V (unless otherwise noted) (see 图 7-1)

PARAMETER	FROM (INPUT)	TO (OUTPUT)	V_{CCB} = 1.8 V ±0.15 V		V_{CCB} = 2.5 V ±0.2 V		V_{CCB} = 3.3 V ±0.3 V		V_{CCB} = 5 V ±0.5 V		UNIT
			MIN	MAX	MIN	MAX	MIN	MAX	MIN	MAX	
t_{PLH}	A	B	1.9	15.1	1	7.5	0.6	5.4	0.5	3.9	ns
t_{PHL}			1.8	12.2	0.9	6.2	0.7	4.5	0.5	3.5	
t_{PLH}	B	A	1.4	7.2	1	5.1	0.7	4.4	0.5	3.9	ns
t_{PHL}			1.7	7	0.9	4.6	0.7	4	0.5	3.5	
t_{PHZ}	DIR	A	2.9	8.2	2.9	7.9	2.8	7.9	2.2	7.8	ns
t_{PLZ}			1.4	6.9	1.3	6.7	0.7	6.7	0.7	6.6	
t_{PHZ}	DIR	B	5.8	26.1	4.4	13.9	4.4	10.1	1.3	7.3	ns
t_{PLZ}			4.7	16.9	3.3	11	4	7.7	1	5.6	
t_{PZH} (1)	DIR	A		24.1		16.1		12.1		9.5	ns
t_{PZL} (1)				33.1		18.5		14.1		10.8	
t_{PZH} (1)	DIR	B		22		14.2		12.1		10.5	ns
t_{PZL} (1)				20.4		14.1		12.4		11.3	

(1) The enable time is a calculated value, derived using the formula shown in the *Enable Times* section.

Copyright © 2022 Texas Instruments Incorporated

6.10 Operating Characteristics

T_A = 25°C

PARAMETER		TEST CONDITIONS	V_{CCA} = V_{CCB} = 1.8 V	V_{CCA} = V_{CCB} = 2.5 V	V_{CCA} = V_{CCB} = 3.3 V	V_{CCA} = V_{CCB} = 5 V	UNIT
			TYP	TYP	TYP	TYP	
C_{pdA} (1)	A-port input, B-port output	C_L = 0 pF, f = 10 MHz, $t_r = t_f$ = 1 ns	3	4	4	4	pF
	B-port input, A-port output		18	19	20	21	
C_{pdB} (1)	A-port input, B-port output	C_L = 0 pF, f = 10 MHz, $t_r = t_f$ = 1 ns	18	19	20	21	pF
	B-port input, A-port output		3	4	4	4	

(1) Power dissipation capacitance per transceiver.

Copyright © 2022 Texas Instruments Incorporated

6.11 Typical Characteristics

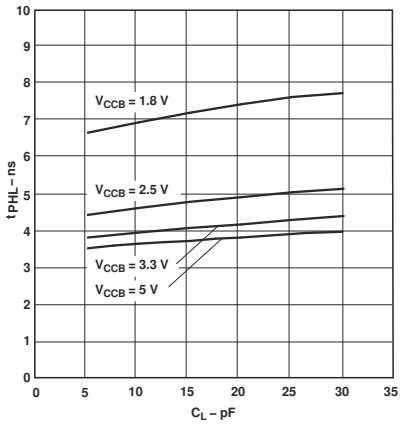

图 6-1. Typical Propagation Delay of High-to-Low (A to B) vs Load Capacitance T_A = 25°C, V_{CCA} = 1.8 V

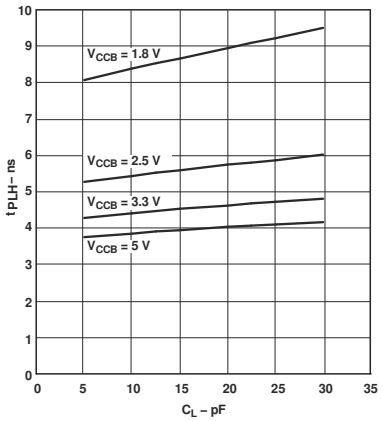

图 6-2. Typical Propagation Delay of Low-to-High (A to B) vs Load Capacitance T_A = 25°C, V_{CCA} = 1.8 V

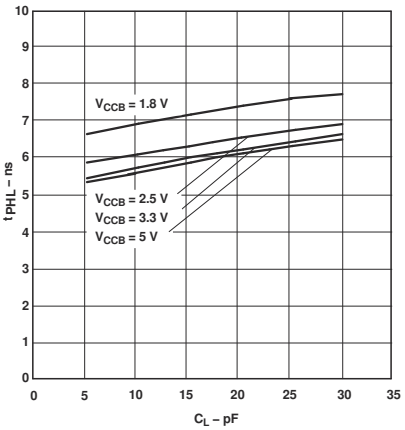

图 6-3. Typical Propagation Delay of High-to-Low (B to A) vs Load Capacitance T_A = 25°C, V_{CCA} = 1.8 V

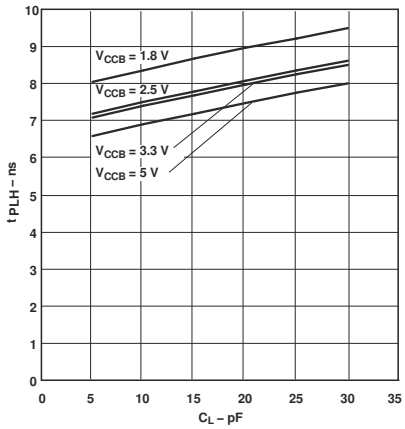

图 6-4. Typical Propagation Delay of Low-to-High (B to A) vs Load Capacitance T_A = 25°C, V_{CCA} = 1.8 V

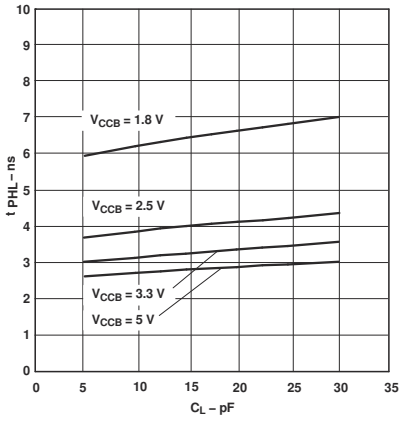

图 6-5. Typical Propagation Delay of High-to-Low (A to B) vs Load Capacitance T_A = 25°C, V_{CCA} = 2.5 V

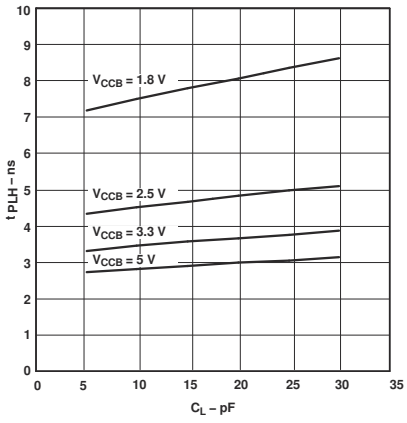

图 6-6. Typical Propagation Delay of Low-to-High (A to B) vs Load Capacitance T_A = 25°C, V_{CCA} = 2.5 V

Copyright © 2022 Texas Instruments Incorporated

6.11 Typical Characteristics (continued)

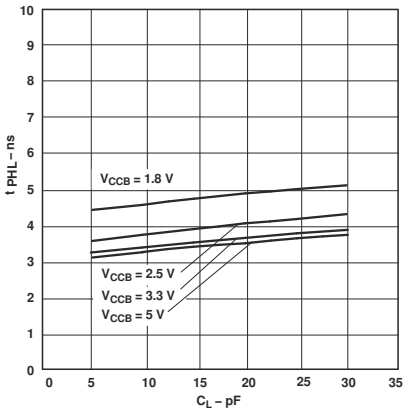

图 6-7. Typical Propagation Delay of High-to-Low (B to A) vs Load Capacitance T_A = 25°C, V_{CCA} = 2.5 V

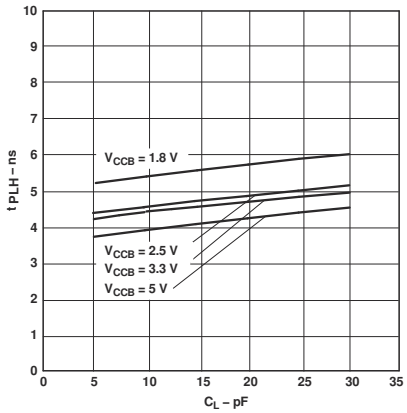

图 6-8. Typical Propagation Delay of Low-to-High (B to A) vs Load Capacitance T_A = 25°C, V_{CCA} = 2.5 V

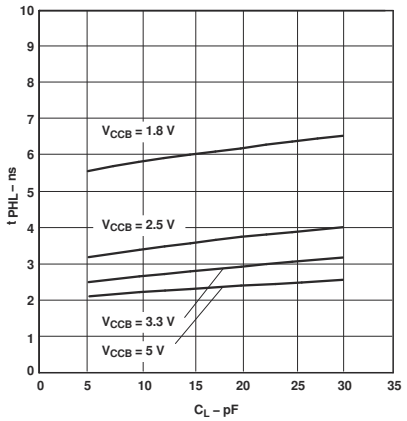

图 6-9. Typical Propagation Delay of High-to-Low (A to B) vs Load Capacitance T_A = 25°C, V_{CCA} = 3.3 V

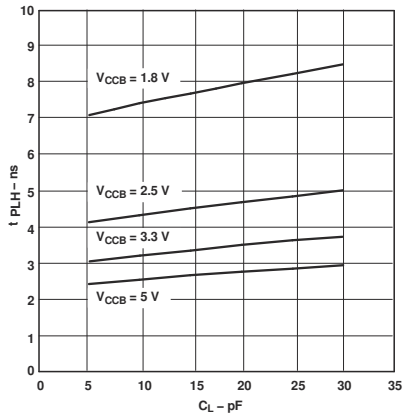

图 6-10. Typical Propagation Delay of Low-to-High (A to B) vs Load Capacitance T_A = 25°C, V_{CCA} = 3.3 V

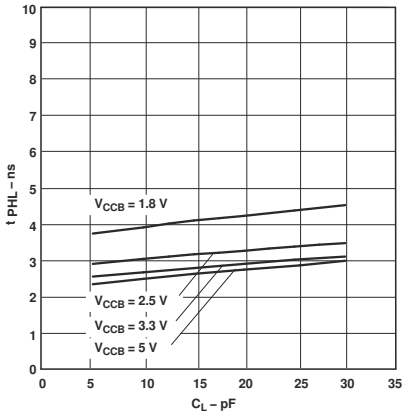

图 6-11. Typical Propagation Delay of High-to-Low (B to A) vs Load Capacitance T_A = 25°C, V_{CCA} = 3.3 V

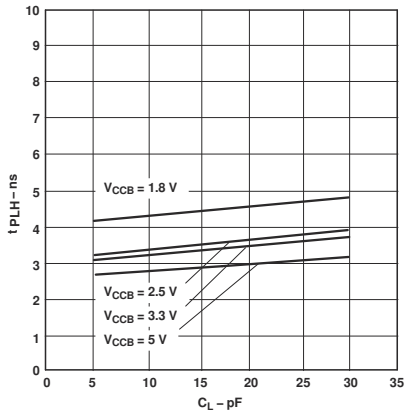

图 6-12. Typical Propagation Delay of Low-to-High (B to A) vs Load Capacitance T_A = 25°C, V_{CCA} = 3.3 V

Copyright © 2022 Texas Instruments Incorporated

6.11 Typical Characteristics (continued)

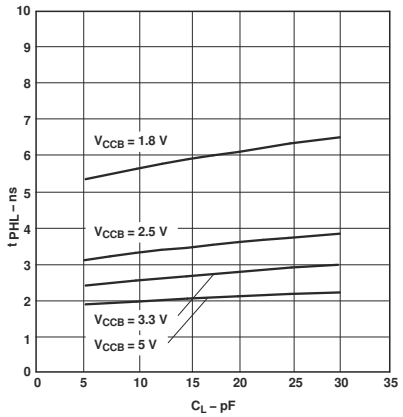

图 6-13. Typical Propagation Delay of High-to-Low (A to B) vs Load Capacitance T_A = 25°C, V_{CCA} = 5 V

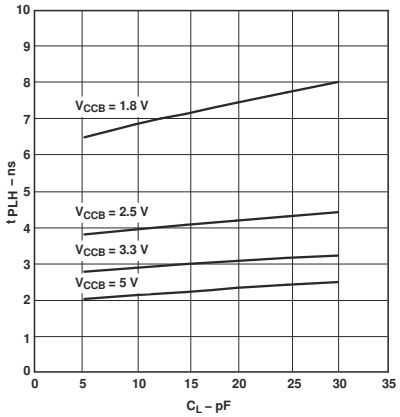

图 6-14. Typical Propagation Delay of Low-to-High (A to B) vs Load Capacitance T_A = 25°C, V_{CCA} = 5 V

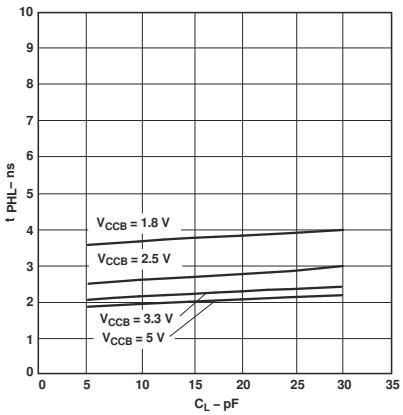

图 6-15. Typical Propagation Delay of High-to-Low (B to A) vs Load Capacitance T_A = 25°C, V_{CCA} = 5 V

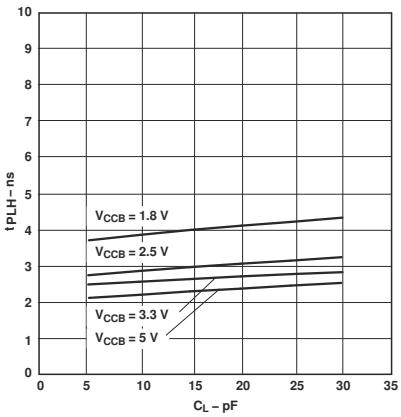

图 6-16. Typical Propagation Delay of Low-to-High (B to A) vs Load Capacitance T_A = 25°C, V_{CCA} = 5 V

Copyright © 2022 Texas Instruments Incorporated

7 Parameter Measurement Information

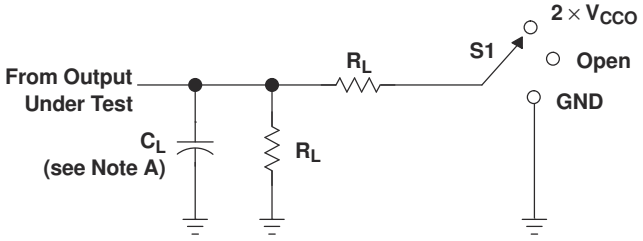

LOAD CIRCUIT

TEST	S1
t_{pd}	Open
t_{PLZ}/t_{PZL}	$2 \times V_{CCO}$
t_{PHZ}/t_{PZH}	GND

V_{CCO}	C_L	R_L	V_{TP}
1.8 V ± 0.15 V	15 pF	2 kΩ	0.15 V
2.5 V ± 0.2 V	15 pF	2 kΩ	0.15 V
3.3 V ± 0.3 V	15 pF	2 kΩ	0.3 V
5 V ± 0.5 V	15 pF	2 kΩ	0.3 V

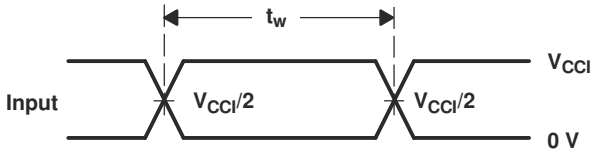

VOLTAGE WAVEFORMS
PULSE DURATION

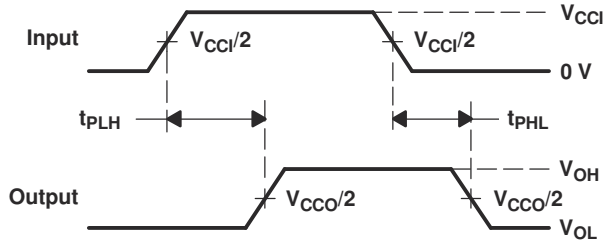

VOLTAGE WAVEFORMS
PROPAGATION DELAY TIMES

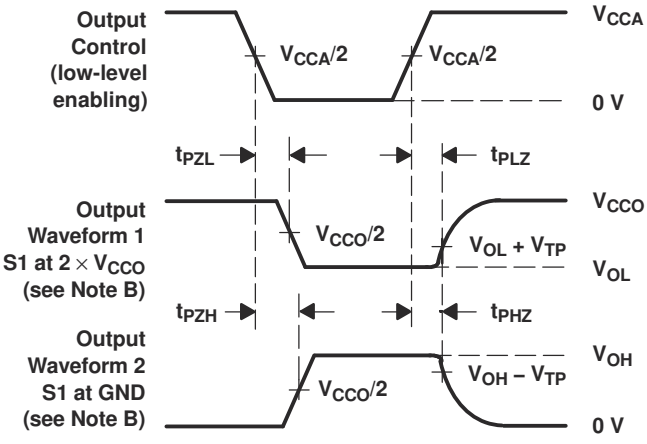

VOLTAGE WAVEFORMS
ENABLE AND DISABLE TIMES

NOTES: A. C_L includes probe and jig capacitance.
B. Waveform 1 is for an output with internal conditions such that the output is low, except when disabled by the output control. Waveform 2 is for an output with internal conditions such that the output is high, except when disabled by the output control.
C. All input pulses are supplied by generators having the following characteristics: PRR ≤ 10 MHz, Z_O = 50 Ω, dv/dt ≥ 1 V/ns.
D. The outputs are measured one at a time, with one transition per measurement.
E. t_{PLZ} and t_{PHZ} are the same as t_{dis}.
F. t_{PZL} and t_{PZH} are the same as t_{en}.
G. t_{PLH} and t_{PHL} are the same as t_{pd}.
H. V_{CCI} is the V_{CC} associated with the input port.
I. V_{CCO} is the V_{CC} associated with the output port.
J. All parameters and waveforms are not applicable to all devices.

图 7-1. Load Circuit and Voltage Waveforms

Copyright © 2022 Texas Instruments Incorporated

8 Detailed Description

8.1 Overview

The SN74LVC2T45 is a dual-bit, dual-supply noninverting voltage level translation device. V_{CCA} supports pin Ax and the direction control pin, and V_{CCB} supports pin Bx. The A port is able to accept I/O voltages ranging from 1.65 V to 5.5 V, while the B port can accept I/O voltages from 1.65 V to 5.5 V. The high on DIR allows data transmission from A to B and a low on DIR allows data transmission from B to A.

8.2 Functional Block Diagram

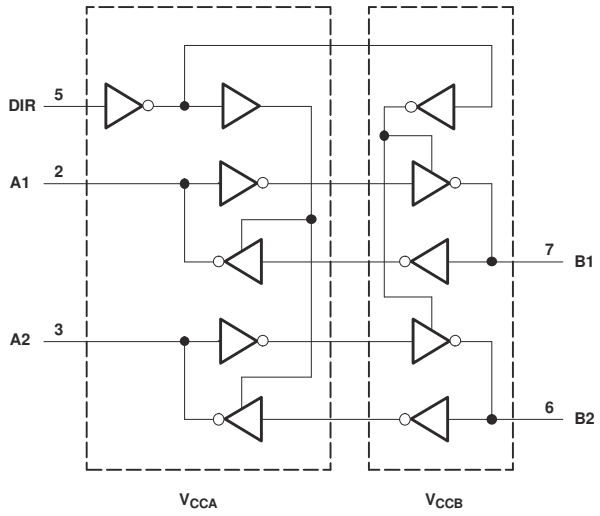

图 8-1. Logic Diagram (Positive Logic)

8.3 Feature Description

8.3.1 Fully Configurable Dual-Rail Design Allows Each Port to Operate Over the Full 1.65-V to 5.5-V Power-Supply Range

Both V_{CCA} and V_{CCB} can be supplied at any voltage between 1.65 V and 5.5 V making the device suitable for translating between any of the voltage nodes (1.8-V, 2.5-V, 3.3-V, and 5-V).

8.3.2 Support High-Speed Translation

SN74LVC2T45 can support high data rate applications. The translated signal data rate can be up to 420 Mbps when signal is translated from 3.3 V to 5 V.

8.3.3 I_{off} Supports Partial-Power-Down Mode Operation

I_{off} will prevent backflow current by disabling I/O output circuits when the device is in Partial-Power-Down mode. The inputs and outputs for this device enter a high-impedance state when the device is powered down, inhibiting current backflow into the device. The maximum leakage into or out of any input or output pin on the device is specified by I_{off} in the *Electrical Characteristics*.

8.3.4 Balanced High-Drive CMOS Push-Pull Outputs

A balanced output allows the device to sink and source similar currents. The high drive capability of this device creates fast edges into light loads so impedance matching and load conditions should be considered to prevent ringing. Additionally, the outputs of this device are capable of driving larger currents than the device can sustain without being damaged. Two outputs can be connected together for a stronger output drive strength. The electrical and thermal limits defined in the *Absolute Maximum Ratings* must be followed at all times.

Copyright © 2022 Texas Instruments Incorporated

8.3.5 V_{cc} Isolation

The I/O's of both ports will enter a high-impedance state when either of the supplies are at GND, while the other supply is still connected to the device. The maximum leakage into or out of any input or output pin on the device is specified by I_{off} in the *Electrical Characteristics*.

8.4 Device Functional Modes

表 8-1 lists the functional modes of the SN74LVC2T45 device.

表 8-1. Function Table (Each Transceiver)(1)

INPUT DIR	OPERATION
L	B data to A bus
H	A data to B bus

(1) Input circuits of the data I/Os always are active.

9 Application and Implementation

备注

以下应用部分中的信息不属于 TI 器件规格的范围，TI 不担保其准确性和完整性。TI 的客 户应负责确定器件是否适用于其应用。客户应验证并测试其设计，以确保系统功能。

9.1 Application Information

The SN74LVC2T45 device can be used in level-translation applications for interfacing devices or systems operating at different interface voltages with one another. The maximum data rate can be up to 420 Mbps when the device translates signal from 3.3 V to 5 V. It is recommended to tie all unused I/Os to GND. The device should not have any floating I/Os when changing translation direction.

9.2 Typical Applications

9.2.1 Unidirectional Logic Level-Shifting Application

图 9-1 shows an example of the SN74LVC2T45 being used in a unidirectional logic level-shifting application.

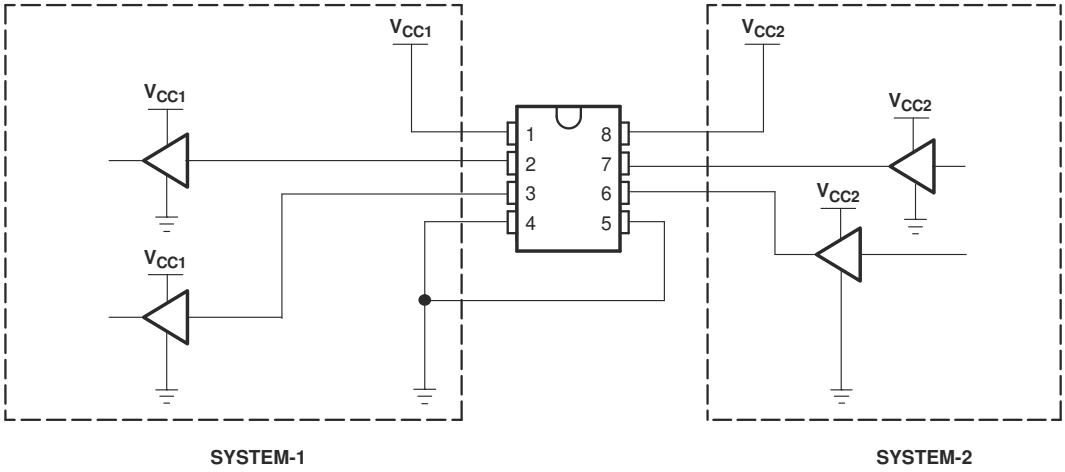

图 9-1. Unidirectional Logic Level-Shifting Application

9.2.1.1 Design Requirements

表 9-1 lists the pins and pin descriptions of the SN74LVC2T45 connections with SYSTEM-1 and SYSTEM-2.

表 9-1. SN74LVC2T45 Pin Connections With SYSTEM-1 and SYSTEM-2

PIN	NAME	FUNCTION	DESCRIPTION
1	V_{CCA}	V_{CC1}	SYSTEM-1 supply voltage (1.65 V to 5.5 V)
2	A1	OUT1	Output level depends on V_{CC1} voltage.
3	A2	OUT2	Output level depends on V_{CC1} voltage.
4	GND	GND	Device GND
5	DIR	DIR	GND (low level) determines B-port to A-port direction.
6	B2	IN2	Input threshold value depends on V_{CC2} voltage.
7	B1	IN1	Input threshold value depends on V_{CC2} voltage.
8	V_{CCB}	V_{CC2}	SYSTEM-2 supply voltage (1.65 V to 5.5 V)

For this design example, use the parameters listed in 表 9-2.

Copyright © 2022 Texas Instruments Incorporated

表 9-2. Design Parameters

DESIGN PARAMETER	EXAMPLE VALUE
Input voltage range	1.65 V to 5.5 V
Output voltage range	1.65 V to 5.5 V

9.2.1.2 Detailed Design Procedure

To begin the design process, determine the following:

- Input voltage range
  - Use the supply voltage of the device that is driving the SN74LVC2T45 device to determine the input voltage range. For a valid logic high, the value must exceed the V_{IH} of the input port. For a valid logic low, the value must be less than the V_{IL} of the input port.
- Output voltage range
  - Use the supply voltage of the device that the SN74LVC2T45 device is driving to determine the output voltage range.

9.2.1.3 Application Curve

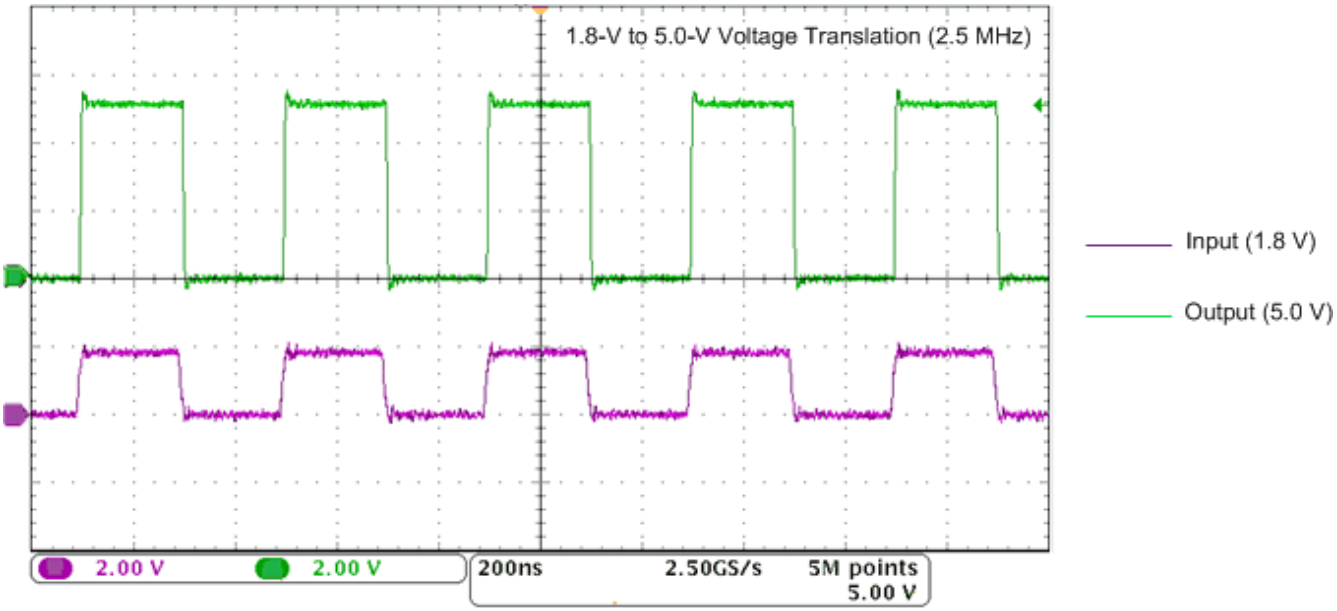

9.2.2 Bidirectional Logic Level-Shifting Application

图 9-2 shows the SN74LVC2T45 being used in a bidirectional logic level-shifting application. Because the SN74LVC2T45 does not have an output-enable (OE) pin, the system designer should take precautions to avoid bus contention between SYSTEM-1 and SYSTEM-2 when changing directions.

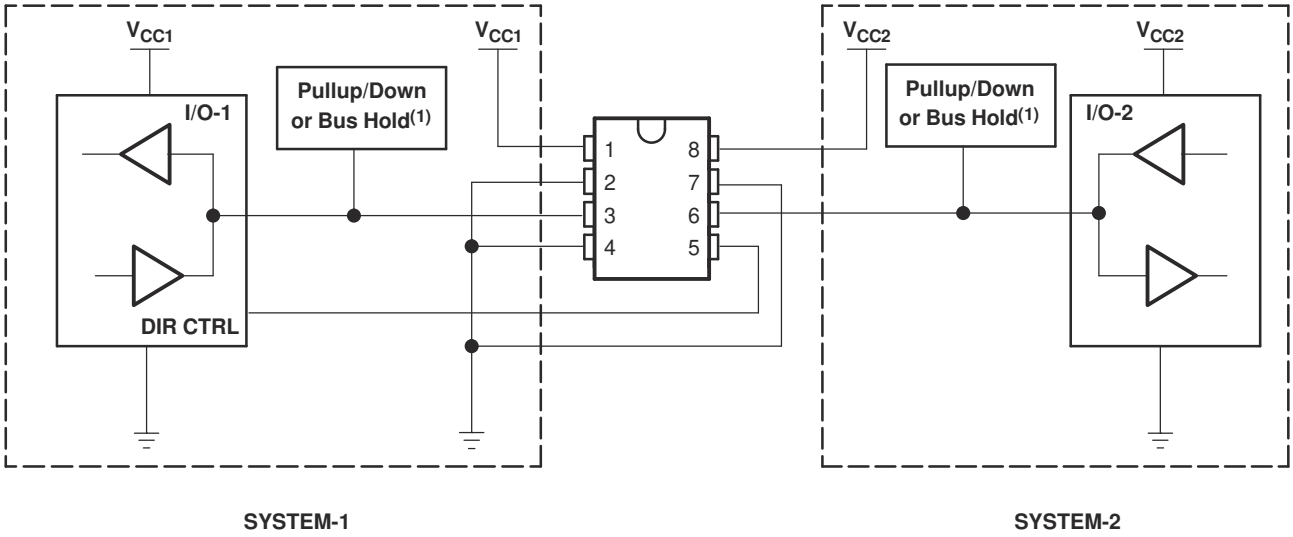

图 9-2. Bidirectional Logic Level-Shifting Application

9.2.2.1 Design Requirements

Refer to 节 9.2.1.

9.2.2.2 Detailed Design Procedure

表 9-3 provides data transmission from SYSTEM-1 to SYSTEM-2 and then from SYSTEM-2 to SYSTEM-1.

表 9-3. Data Transmission Sequence

STATE	DIR CTRL	I/O-1	I/O-2	DESCRIPTION
1	H	Out	In	SYSTEM-1 data to SYSTEM-2
2	H	Hi-Z	Hi-Z	SYSTEM-2 is getting ready to send data to SYSTEM-1. I/O-1 and I/O-2 are disabled. The bus-line state depends on pullup or pulldown.(1)
3	L	Hi-Z	Hi-Z	DIR bit is flipped. I/O-1 and I/O-2 still are disabled. The bus-line state depends on pullup or pulldown.(1)
4	L	In	Out	SYSTEM-2 data to SYSTEM-1

(1) SYSTEM-1 and SYSTEM-2 must use the same conditions, that is, both pullup or both pulldown.

9.2.2.2.1 Enable Times

Calculate the enable times for the SN74LVC2T45 using the following formulas:

- t_{PZH} (DIR to A) = t_{PLZ} (DIR to B) + t_{PLH} (B to A)
- t_{PZL} (DIR to A) = t_{PHZ} (DIR to B) + t_{PHL} (B to A)
- t_{PZH} (DIR to B) = t_{PLZ} (DIR to A) + t_{PLH} (A to B)
- t_{PZL} (DIR to B) = t_{PHZ} (DIR to A) + t_{PHL} (A to B)

In a bidirectional application, these enable times provide the maximum delay from the time the DIR bit is switched until an output is expected. For example, if the SN74LVC2T45 initially is transmitting from A to B, then the DIR bit is switched; the B port of the device must be disabled before presenting it with an input. After the B port has been disabled, an input signal applied to it appears on the corresponding A port after the specified propagation delay.

Copyright © 2022 Texas Instruments Incorporated

9.2.2.3 Application Curve

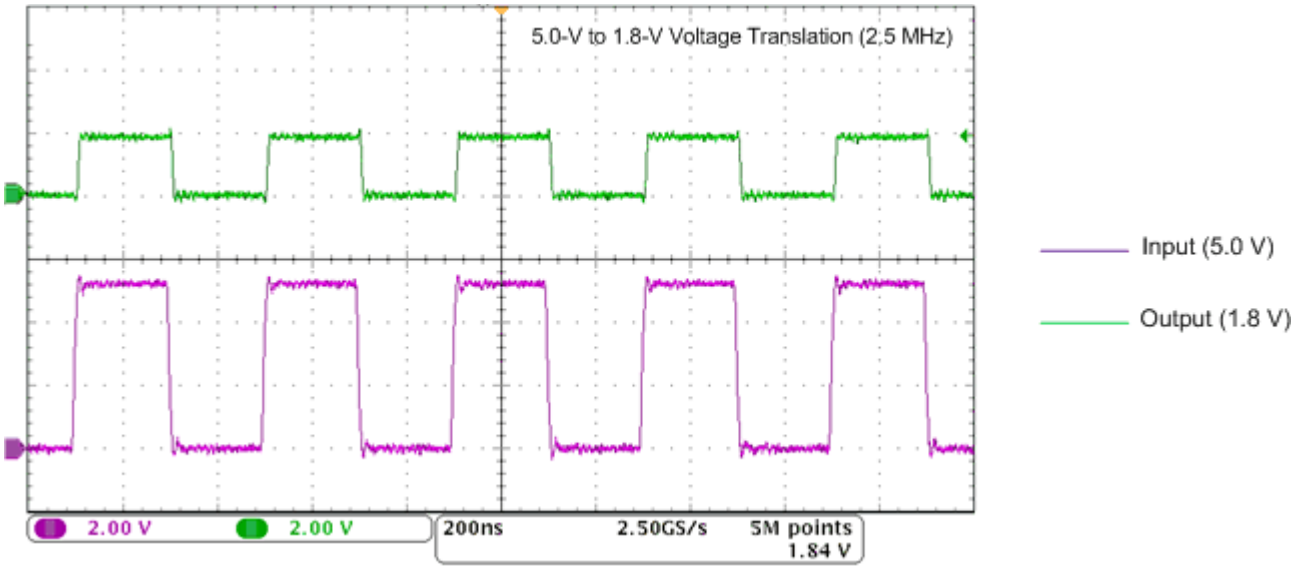

10 Power Supply Recommendations

10.1 Power-Up Considerations

A proper power-up sequence with inputs held at ground should be followed as listed:

1. Connect ground before any supply voltage is applied.
2. Power up V_{CCA}.
3. V_{CCB} can be ramped up along with or after V_{CCA}.

The power supply can be any voltage between the minimum and maximum supply voltage rating located in the *Recommended Operating Conditions*. The recommendation is to first power-up the input supply rail to help avoid internal floating while the output supply rail ramps up. However, both power-supply rails can be ramped up simultaneously.

Each V_{CC} pin must have a good bypass capacitor to prevent power disturbance. For devices with a single supply, 0.1 µF is recommended. If there are multiple V_{CC} pins, 0.01 µF or 0.022 µF is recommended for each power pin. It is acceptable to parallel multiple bypass capacitors to reject different frequencies of noise. 0.1-µF and 1-µF capacitors are commonly used in parallel. The bypass capacitor must be installed as close to the power pin as possible for best results.

表 10-1. Typical Total Static Power Consumption (I_{CCA} + I_{CCB})

V_{CCB}	V_{CCA}					UNIT
	0 V	1.8 V	2.5 V	3.3 V	5 V	
0 V	0	< 1	< 1	< 1	< 1	µA
1.8 V	< 1	< 2	< 2	< 2	2	
2.5 V	< 1	< 2	< 2	< 2	< 2	
3.3 V	< 1	< 2	< 2	< 2	< 2	
5 V	< 1	2	< 2	< 2	< 2	

Copyright © 2022 Texas Instruments Incorporated

11 Layout

11.1 Layout Guidelines

It is recommended to follow common printed-circuit board layout guidelines to ensure reliability of the device, such as the following:

- Use bypass capacitors on the power supplies.
- Use short trace lengths to avoid excessive loading.
- Place pads on the signal paths for loading capacitors or pullup resistors to help adjust rise and fall times of signals depending on the system requirements.

11.2 Layout Example

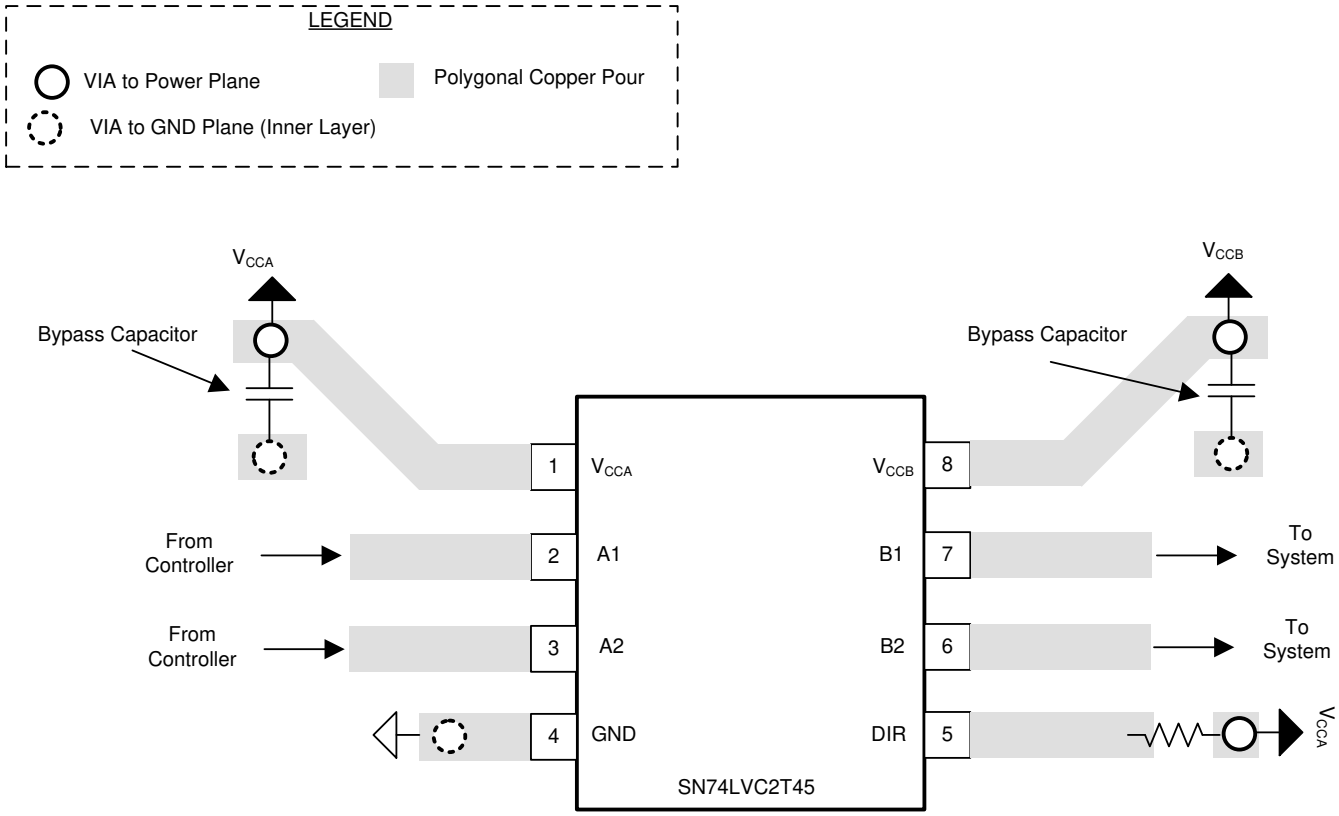

图 11-1. SN74LVC2T45 Layout Example

12 Device and Documentation Support

12.1 Documentation Support

12.1.1 Related Documentation

For related documentation, see the following:

- Texas Instruments, *Implications of Slow or Floating CMOS Inputs* application note
- Texas Instruments, *Designing with SN74LVCXT245 and SN74LVCHXT245 Family of Direction controlled voltage translators* application note

12.2 接收文档更新通知

要接收文档更新通知，请导航至 ti.com 上的器件产品文件夹。点击 *订阅更新* 进行注册，即可每周接收产品信息更改摘要。有关更改的详细信息，请查看任何已修订文档中包含的修订历史记录。

12.3 支持资源

TI E2E™ 支持论坛是工程师的重要参考资料，可直接从专家获得快速、经过验证的解答和设计帮助。搜索现有解答或提出自己的问题可获得所需的快速设计帮助。

链接的内容由各个贡献者“按原样”提供。这些内容并不构成 TI 技术规范，并且不一定反映 TI 的观点；请参阅 TI 的《使用条款》。

12.4 Trademarks

NanoFree™ is a trademark of Texas Instruments.
TI E2E™ is a trademark of Texas Instruments.
所有商标均为其各自所有者的财产。

12.5 Electrostatic Discharge Caution



This integrated circuit can be damaged by ESD. Texas Instruments recommends that all integrated circuits be handled with appropriate precautions. Failure to observe proper handling and installation procedures can cause damage.

ESD damage can range from subtle performance degradation to complete device failure. Precision integrated circuits may be more susceptible to damage because very small parametric changes could cause the device not to meet its published specifications.

12.6 术语表

TI 术语表　　本术语表列出并解释了术语、首字母缩略词和定义。

13 Mechanical, Packaging, and Orderable Information

The following pages include mechanical, packaging, and orderable information. This information is the most current data available for the designated devices. This data is subject to change without notice and revision of this document. For browser-based versions of this data sheet, refer to the left-hand navigation.

Copyright © 2022 Texas Instruments Incorporated

PACKAGING INFORMATION

Orderable Device	Status (1)	Package Type	Package Drawing	Pins	Package Qty	Eco Plan (2)	Lead finish/ Ball material (6)	MSL Peak Temp (3)	Op Temp (°C)	Device Marking (4/5)	Samples
SN74LVC2T45DCTR	ACTIVE	SM8	DCT	8	3000	RoHS & Green	SN	Level-1-260C-UNLIM	-40 to 85	CT2 (R, Z)	Samples
SN74LVC2T45DCTRE4	ACTIVE	SM8	DCT	8	3000	RoHS & Green	SN	Level-1-260C-UNLIM	-40 to 85	CT2 (R, Z)	Samples
SN74LVC2T45DCTT	ACTIVE	SM8	DCT	8	250	RoHS & Green	SN	Level-1-260C-UNLIM	-40 to 85	CT2 (R, Z)	Samples
SN74LVC2T45DCTTG4	ACTIVE	SM8	DCT	8	250	RoHS & Green	SN	Level-1-260C-UNLIM	-40 to 85	CT2 (R, Z)	Samples
SN74LVC2T45DCUR	ACTIVE	VSSOP	DCU	8	3000	RoHS & Green	NIPDAU | SN	Level-1-260C-UNLIM	-40 to 85	(CT2J, CT2Q, CT2R, T2) CZ	Samples
SN74LVC2T45DCURE4	ACTIVE	VSSOP	DCU	8	3000	RoHS & Green	NIPDAU	Level-1-260C-UNLIM	-40 to 85	CT2R	Samples
SN74LVC2T45DCURG4	ACTIVE	VSSOP	DCU	8	3000	RoHS & Green	NIPDAU	Level-1-260C-UNLIM	-40 to 85	CT2R	Samples
SN74LVC2T45DCUT	ACTIVE	VSSOP	DCU	8	250	RoHS & Green	SN	Level-1-260C-UNLIM	-40 to 85	(CT2J, CT2Q, CT2R, T2) CZ	Samples
SN74LVC2T45DCUTG4	ACTIVE	VSSOP	DCU	8	250	RoHS & Green	NIPDAU	Level-1-260C-UNLIM	-40 to 85	CT2R	Samples
SN74LVC2T45YZPR	ACTIVE	DSBGA	YZP	8	3000	RoHS & Green	SAC396 | SNAGCU	Level-1-260C-UNLIM	-40 to 85	(TB, TB7, TBN)	Samples

(1) The marketing status values are defined as follows:
ACTIVE: Product device recommended for new designs.
LIFEBUY: TI has announced that the device will be discontinued, and a lifetime-buy period is in effect.
NRND: Not recommended for new designs. Device is in production to support existing customers, but TI does not recommend using this part in a new design.
PREVIEW: Device has been announced but is not in production. Samples may or may not be available.
OBSOLETE: TI has discontinued the production of the device.

(2) **RoHS:** TI defines "RoHS" to mean semiconductor products that are compliant with the current EU RoHS requirements for all 10 RoHS substances, including the requirement that RoHS substance do not exceed 0.1% by weight in homogeneous materials. Where designed to be soldered at high temperatures, "RoHS" products are suitable for use in specified lead-free processes. TI may reference these types of products as "Pb-Free".
RoHS Exempt: TI defines "RoHS Exempt" to mean products that contain lead but are compliant with EU RoHS pursuant to a specific EU RoHS exemption.
Green: TI defines "Green" to mean the content of Chlorine (Cl) and Bromine (Br) based flame retardants meet JS709B low halogen requirements of <=1000ppm threshold. Antimony trioxide based flame retardants must also meet the <=1000ppm threshold requirement.

(3) MSL, Peak Temp. - The Moisture Sensitivity Level rating according to the JEDEC industry standard classifications, and peak solder temperature.

(4) There may be additional marking, which relates to the logo, the lot trace code information, or the environmental category on the device.

(5) Multiple Device Markings will be inside parentheses. Only one Device Marking contained in parentheses and separated by a "~" will appear on a device. If a line is indented then it is a continuation of the previous line and the two combined represent the entire Device Marking for that device.

(6) Lead finish/Ball material - Orderable Devices may have multiple material finish options. Finish options are separated by a vertical ruled line. Lead finish/Ball material values may wrap to two lines if the finish value exceeds the maximum column width.

Important Information and Disclaimer: The information provided on this page represents TI's knowledge and belief as of the date that it is provided. TI bases its knowledge and belief on information provided by third parties, and makes no representation or warranty as to the accuracy of such information. Efforts are underway to better integrate information from third parties. TI has taken and continues to take reasonable steps to provide representative and accurate information but may not have conducted destructive testing or chemical analysis on incoming materials and chemicals. TI and TI suppliers consider certain information to be proprietary, and thus CAS numbers and other limited information may not be available for release.

In no event shall TI's liability arising out of such information exceed the total purchase price of the TI part(s) at issue in this document sold by TI to Customer on an annual basis.

OTHER QUALIFIED VERSIONS OF SN74LVC2T45 :

- Automotive : SN74LVC2T45-Q1
- Enhanced Product : SN74LVC2T45-EP

NOTE: Qualified Version Definitions:

- Automotive - Q100 devices qualified for high-reliability automotive applications targeting zero defects
- Enhanced Product - Supports Defense, Aerospace and Medical Applications

TAPE AND REEL INFORMATION

REEL DIMENSIONS

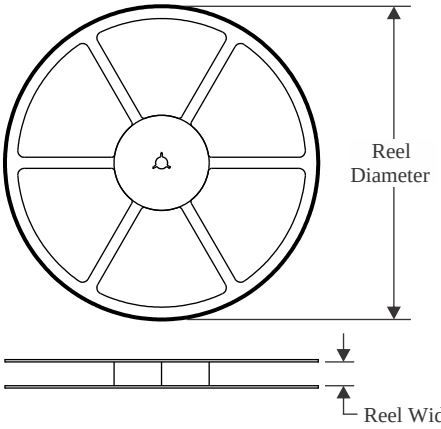

TAPE DIMENSIONS

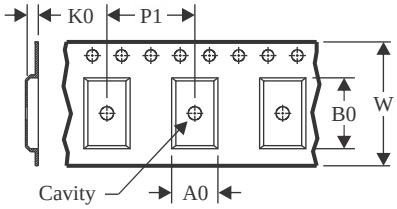

A0	Dimension designed to accommodate the component width
B0	Dimension designed to accommodate the component length
K0	Dimension designed to accommodate the component thickness
W	Overall width of the carrier tape
P1	Pitch between successive cavity centers

QUADRANT ASSIGNMENTS FOR PIN 1 ORIENTATION IN TAPE

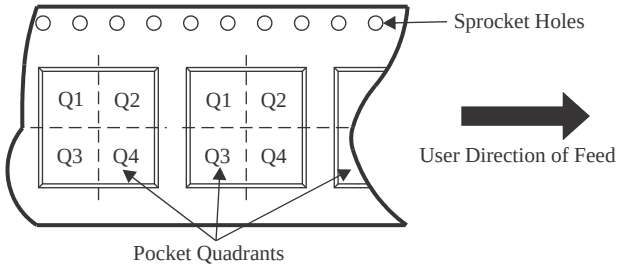

*All dimensions are nominal

Device	Package Type	Package Drawing	Pins	SPQ	Reel Diameter (mm)	Reel Width W1 (mm)	A0 (mm)	B0 (mm)	K0 (mm)	P1 (mm)	W (mm)	Pin1 Quadrant
SN74LVC2T45DCTR	SM8	DCT	8	3000	180.0	12.4	3.15	4.35	1.55	4.0	12.0	Q3
SN74LVC2T45DCTT	SM8	DCT	8	250	180.0	12.4	3.15	4.35	1.55	4.0	12.0	Q3
SN74LVC2T45DCUR	VSSOP	DCU	8	3000	178.0	9.0	2.25	3.35	1.05	4.0	8.0	Q3
SN74LVC2T45DCURG4	VSSOP	DCU	8	3000	178.0	9.0	2.25	3.35	1.05	4.0	8.0	Q3
SN74LVC2T45DCUT	VSSOP	DCU	8	250	178.0	9.0	2.25	3.35	1.05	4.0	8.0	Q3
SN74LVC2T45DCUTG4	VSSOP	DCU	8	250	180.0	8.4	2.25	3.35	1.05	4.0	8.0	Q3
SN74LVC2T45YZPR	DSBGA	YZP	8	3000	178.0	9.2	1.02	2.02	0.63	4.0	8.0	Q1
SN74LVC2T45YZPR	DSBGA	YZP	8	3000	180.0	8.4	1.02	2.02	0.63	4.0	8.0	Q1

TAPE AND REEL BOX DIMENSIONS

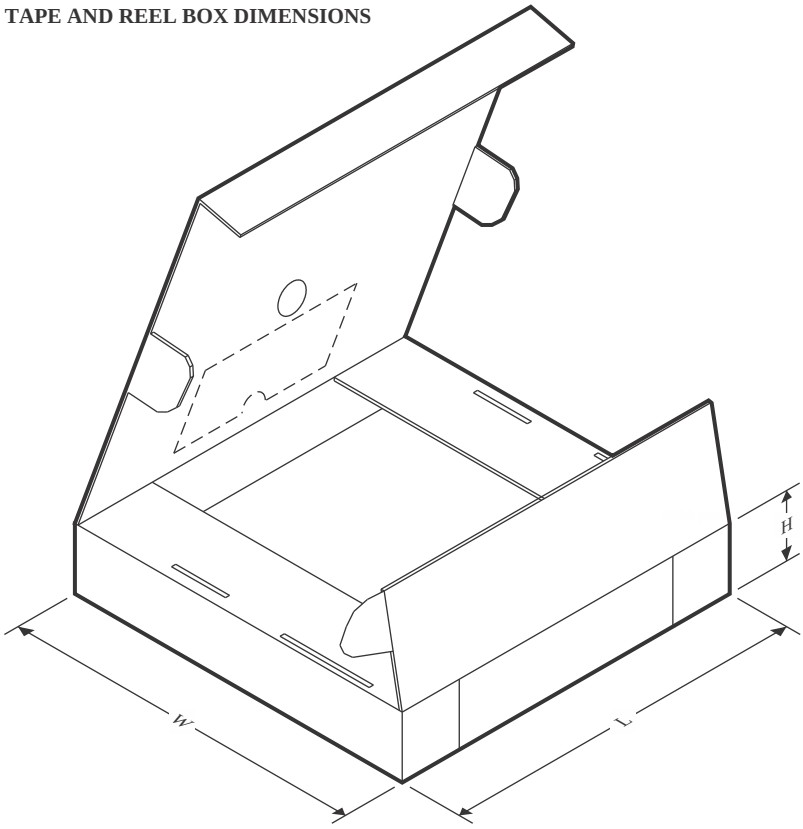

*All dimensions are nominal

Device	Package Type	Package Drawing	Pins	SPQ	Length (mm)	Width (mm)	Height (mm)
SN74LVC2T45DCTR	SM8	DCT	8	3000	190.0	190.0	30.0
SN74LVC2T45DCTT	SM8	DCT	8	250	190.0	190.0	30.0
SN74LVC2T45DCUR	VSSOP	DCU	8	3000	180.0	180.0	18.0
SN74LVC2T45DCURG4	VSSOP	DCU	8	3000	180.0	180.0	18.0
SN74LVC2T45DCUT	VSSOP	DCU	8	250	180.0	180.0	18.0
SN74LVC2T45DCUTG4	VSSOP	DCU	8	250	202.0	201.0	28.0
SN74LVC2T45YZPR	DSBGA	YZP	8	3000	220.0	220.0	35.0
SN74LVC2T45YZPR	DSBGA	YZP	8	3000	182.0	182.0	20.0

DCU0008A



PACKAGE OUTLINE

VSSOP - 0.9 mm max height

SMALL OUTLINE PACKAGE

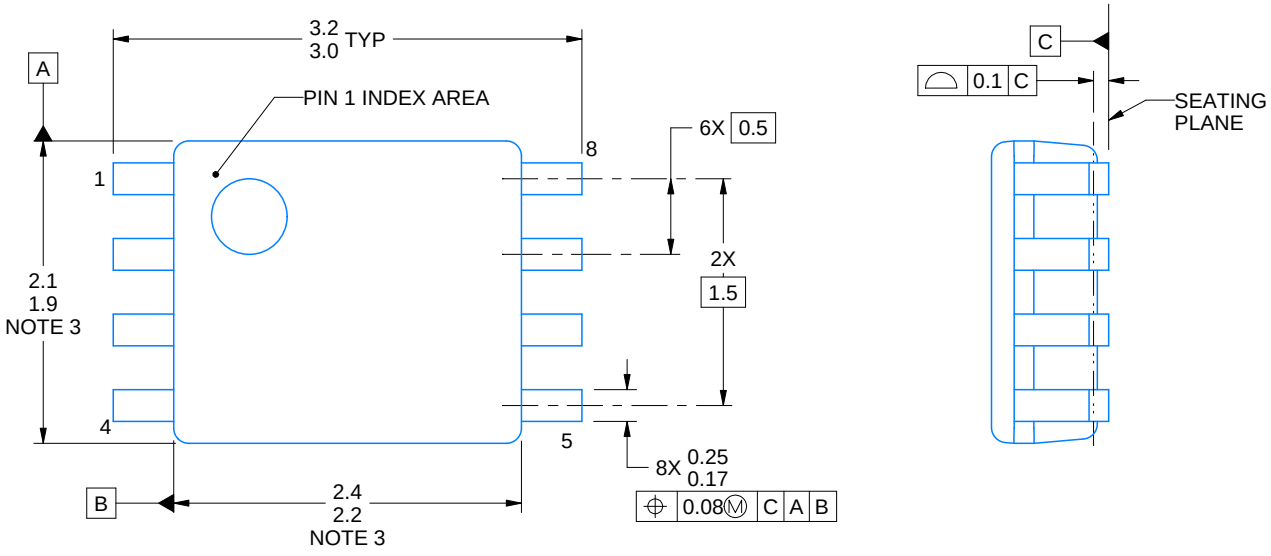

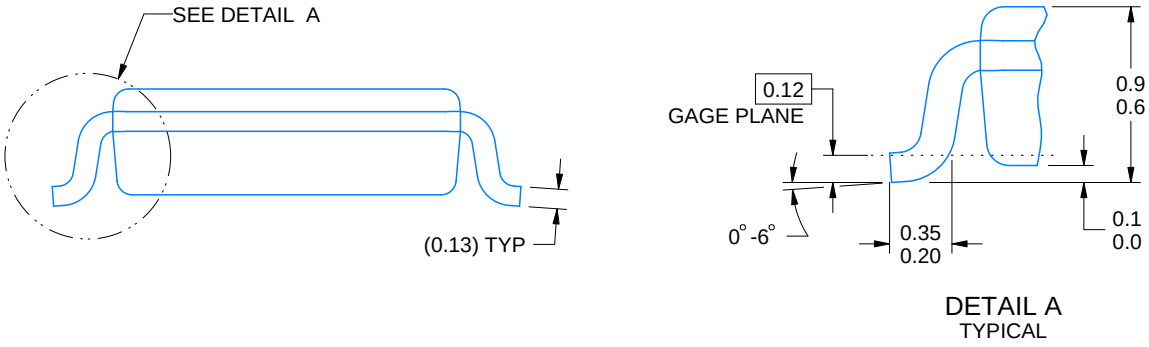

4225266/A 09/2014

NOTES:

1. All linear dimensions are in millimeters. Any dimensions in parenthesis are for reference only. Dimensioning and tolerancing per ASME Y14.5M.
2. This drawing is subject to change without notice.
3. This dimension does not include mold flash, protrusions, or gate burrs. Mold flash, protrusions, or gate burrs shall not exceed 0.15 mm per side.
4. Reference JEDEC registration MO-187 variation CA.

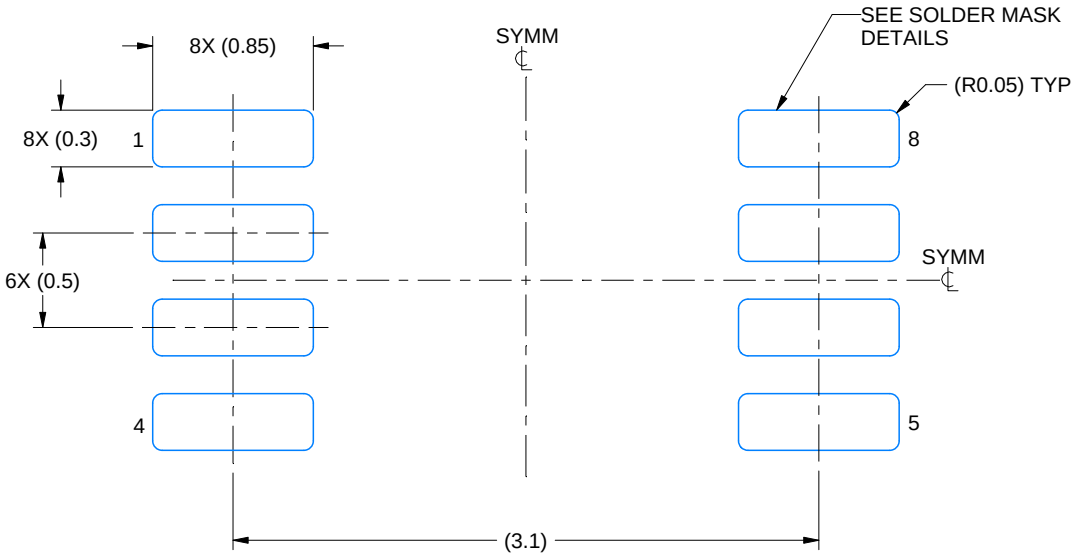

LAND PATTERN EXAMPLE
EXPOSED METAL SHOWN
SCALE: 25X

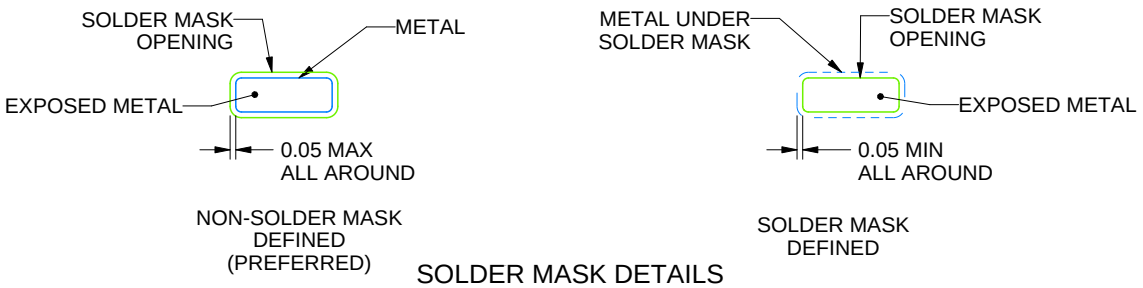

SOLDER MASK DETAILS

4225266/A 09/2014

NOTES: (continued)

5. Publication IPC-7351 may have alternate designs.
6. Solder mask tolerances between and around signal pads can vary based on board fabrication site.

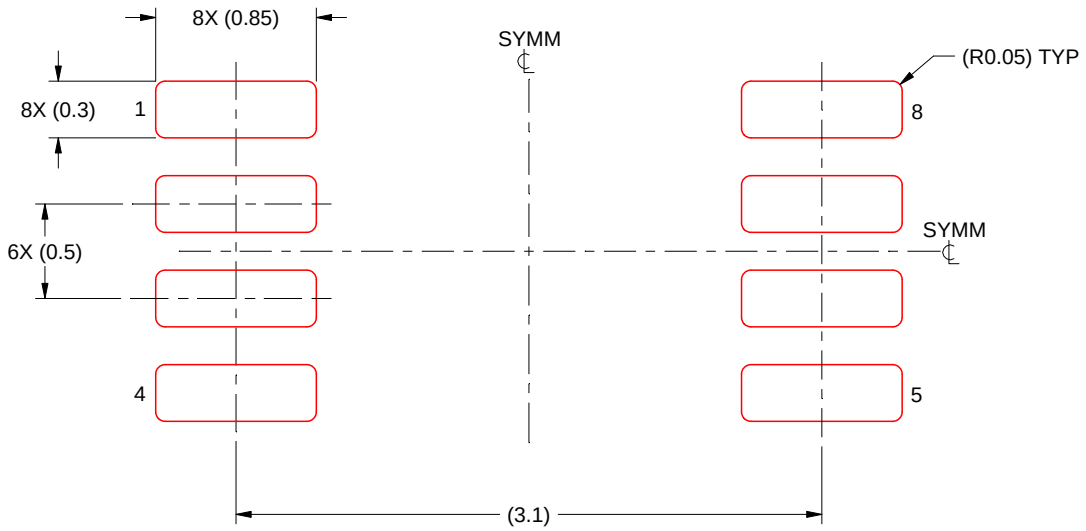

SOLDER PASTE EXAMPLE
BASED ON 0.125 mm THICK STENCIL
SCALE: 25X

4225266/A 09/2014

NOTES: (continued)

7. Laser cutting apertures with trapezoidal walls and rounded corners may offer better paste release. IPC-7525 may have alternate design recommendations.
8. Board assembly site may have different recommendations for stencil design.

PACKAGE OUTLINE

DCT0008A

SSOP - 1.3 mm max height

SMALL OUTLINE PACKAGE

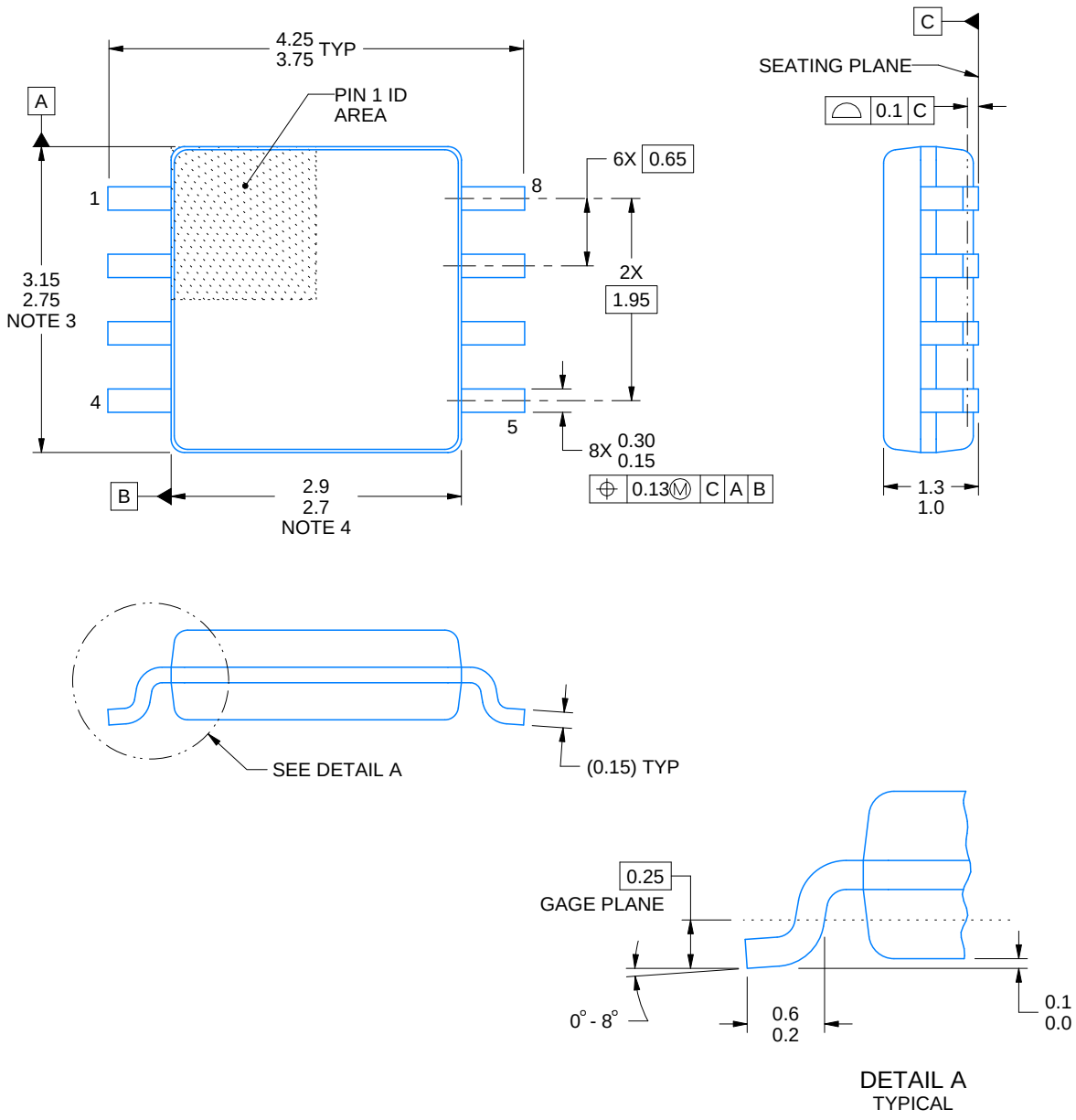

4220784/C 06/2021

NOTES:

1. All linear dimensions are in millimeters. Dimensions in parenthesis are for reference only. Dimensioning and tolerancing per ASME Y14.5M.
2. This drawing is subject to change without notice.
3. This dimension does not include mold flash, protrusions, or gate burrs. Mold flash, protrusions, or gate burrs shall not exceed 0.15 mm per side.
4. This dimension does not include interlead flash. Interlead flash shall not exceed 0.25 mm per side.

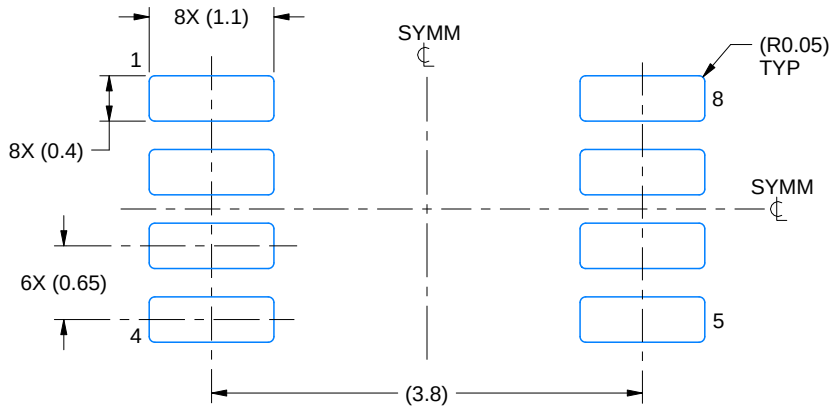

LAND PATTERN EXAMPLE
EXPOSED METAL SHOWN
SCALE:15X

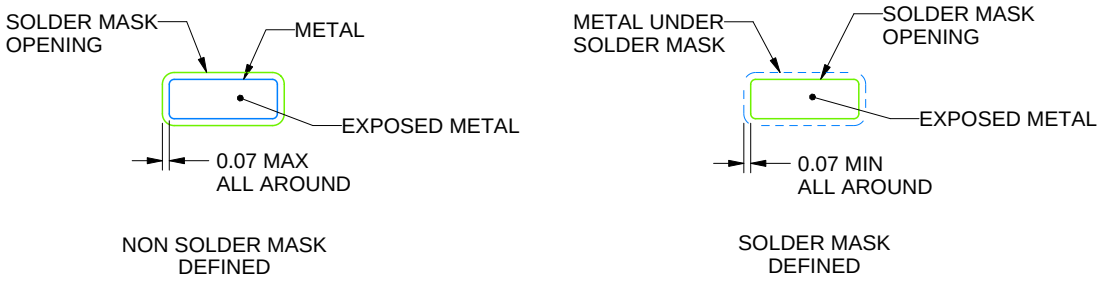

SOLDER MASK DETAILS

4220784/C 06/2021

NOTES: (continued)

5. Publication IPC-7351 may have alternate designs.
6. Solder mask tolerances between and around signal pads can vary based on board fabrication site.

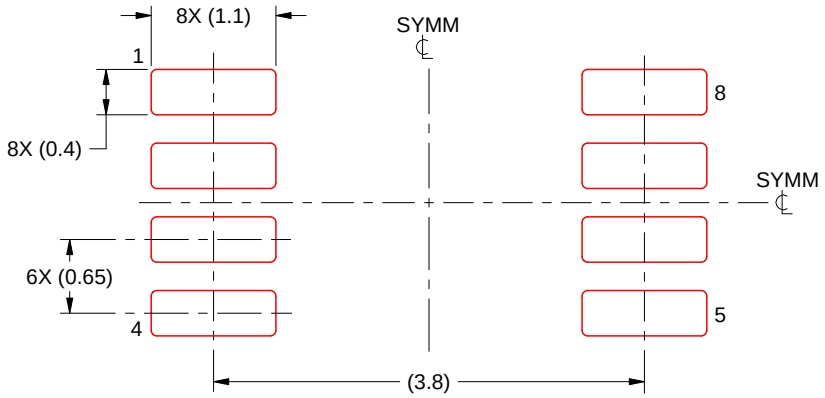

SOLDER PASTE EXAMPLE
BASED ON 0.125 mm THICK STENCIL
SCALE:15X

4220784/C 06/2021

NOTES: (continued)

7. Laser cutting apertures with trapezoidal walls and rounded corners may offer better paste release. IPC-7525 may have alternate design recommendations.
8. Board assembly site may have different recommendations for stencil design.

PACKAGE OUTLINE

YZP0008

DSBGA - 0.5 mm max height

DIE SIZE BALL GRID ARRAY

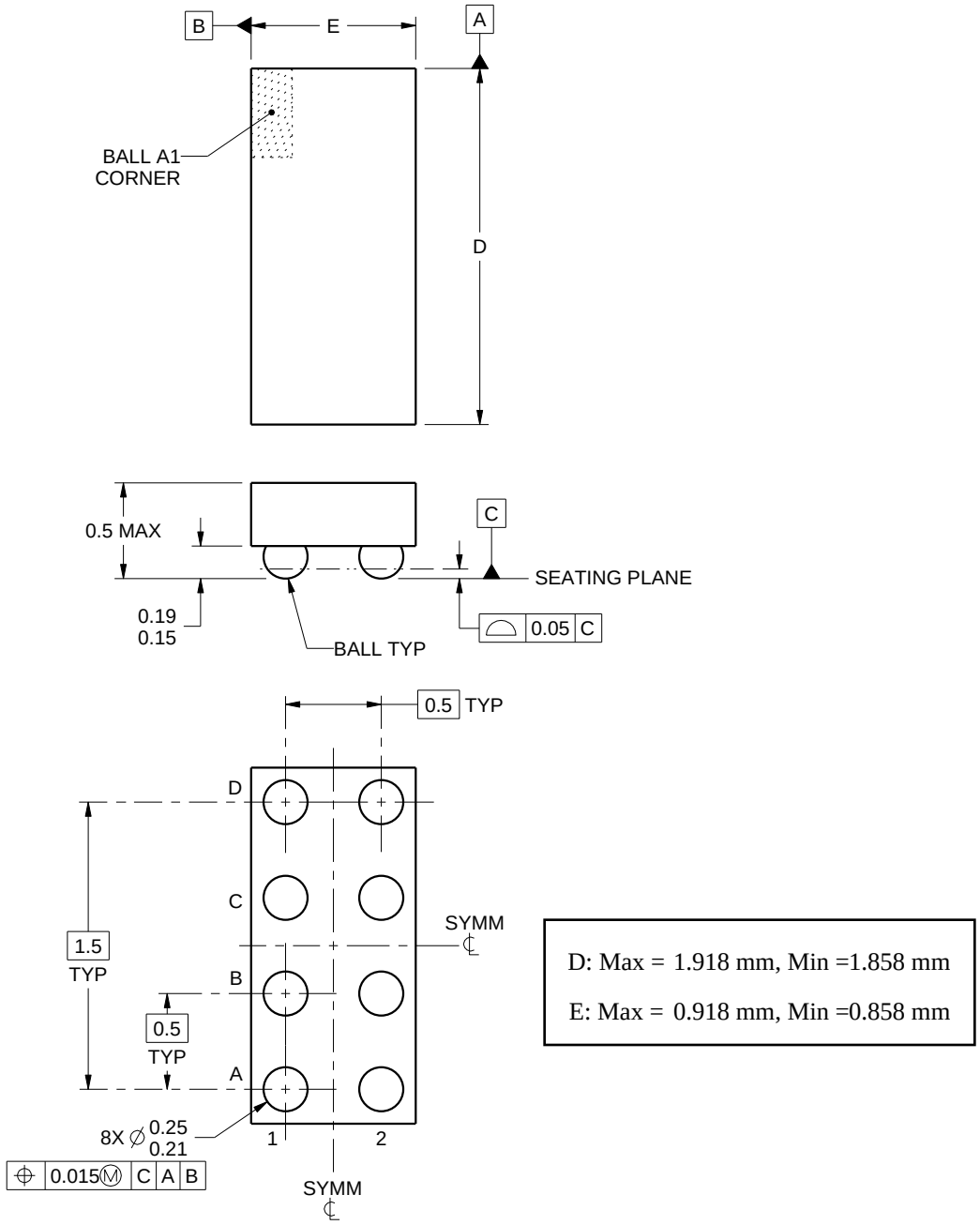

NOTES:

1. All linear dimensions are in millimeters. Any dimensions in parenthesis are for reference only. Dimensioning and tolerancing per ASME Y14.5M.
2. This drawing is subject to change without notice.

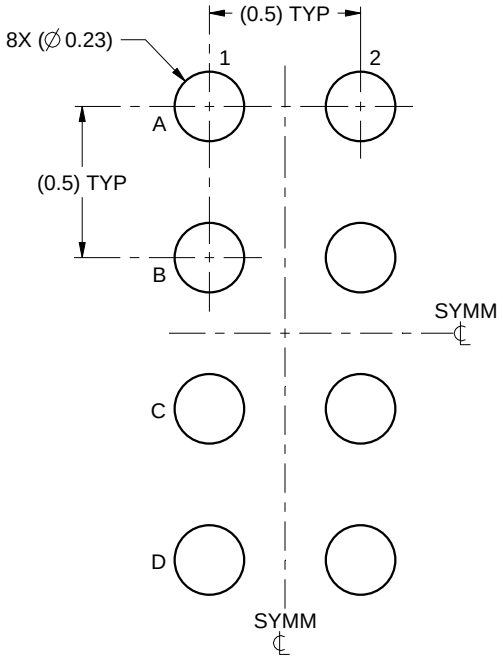

LAND PATTERN EXAMPLE
SCALE:40X

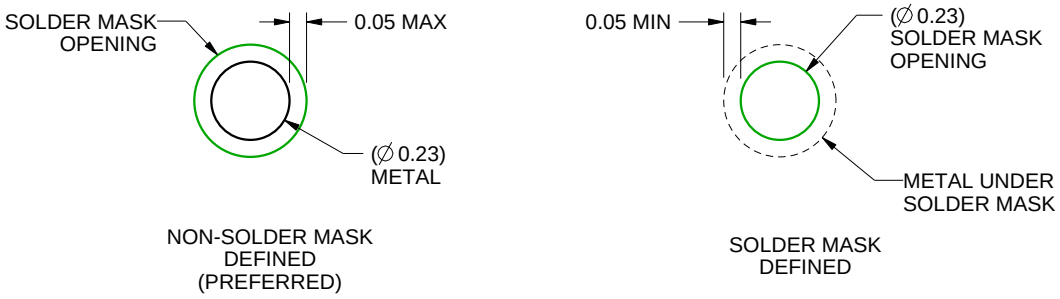

SOLDER MASK DETAILS
NOT TO SCALE

4223082/A 07/2016

NOTES: (continued)

3. Final dimensions may vary due to manufacturing tolerance considerations and also routing constraints. For more information, see Texas Instruments literature number SNVA009 (www.ti.com/lit/snva009).

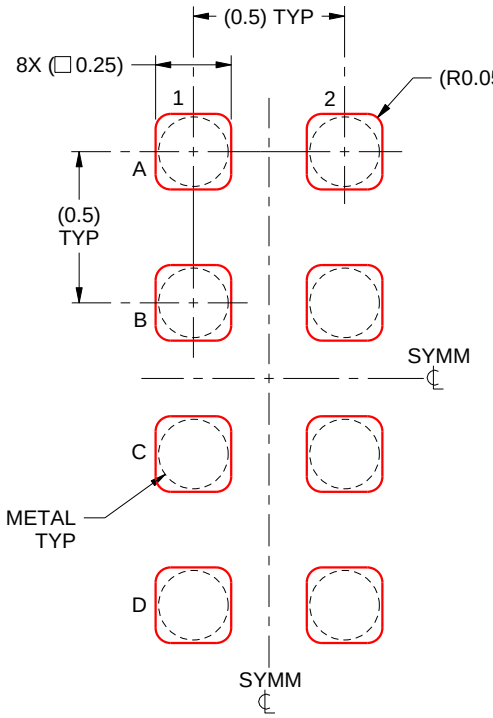

SOLDER PASTE EXAMPLE
BASED ON 0.1 mm THICK STENCIL
SCALE:40X

4223082/A 07/2016

NOTES: (continued)

4. Laser cutting apertures with trapezoidal walls and rounded corners may offer better paste release.

重要声明和免责声明

TI“按原样”提供技术和可靠性数据（包括数据表）、设计资源（包括参考设计）、应用或其他设计建议、网络工具、安全信息和其他资源，不保证没有瑕疵且不做出任何明示或暗示的担保，包括但不限于对适销性、某特定用途方面的适用性或不侵犯任何第三方知识产权的暗示担保。

这些资源可供使用 TI 产品进行设计的熟练开发人员使用。您将自行承担以下全部责任：(1) 针对您的应用选择合适的 TI 产品，(2) 设计、验证并测试您的应用，(3) 确保您的应用满足相应标准以及任何其他功能安全、信息安全、监管或其他要求。

这些资源如有变更，恕不另行通知。TI 授权您仅可将这些资源用于研发本资源所述的 TI 产品的应用。严禁对这些资源进行其他复制或展示。您无权使用任何其他 TI 知识产权或任何第三方知识产权。您应全额赔偿因在这些资源的使用中对 TI 及其代表造成的任何索赔、损害、成本、损失和债务，TI 对此概不负责。

TI 提供的产品受 TI 的销售条款或 ti.com 上其他适用条款/TI 产品随附的其他适用条款的约束。TI 提供这些资源并不会扩展或以其他方式更改 TI 针对 TI 产品发布的适用的担保或担保免责声明。

TI 反对并拒绝您可能提出的任何其他或不同的条款。

邮寄地址：Texas Instruments, Post Office Box 655303, Dallas, Texas 75265
Copyright © 2024，德州仪器 (TI) 公司