NS2727
Digital pressure sensor

2.7x2.7x1.7mm

The NS2727 is a miniaturized Digital Barometric Air Pressure Sensor with a high accuracy and a low current consumption, capable of measuring both pressure and temperature. The pressure sensor element is based on a capacitive principle which guarantees high precision during temperature changes. The small package makes the NS2727 ideal for mobile applications and wearable devices.

The NS2727 result FIFO can store up to 32 measurement results, allowing for a reduced host processor polling rate. Sensor measurements and calibration coefficients are available through the serial I2C or SPI interface. The measurement status is indicated by status bits or interrupts on the SDO pin.

Key Features

- Supply voltage: 1.7 ... 3.6V (VDD), 1.08 ... 3.6V (VDDIO)
- Pressure range: 300hPa~ 1200hPa
- Operation temperature: -40~ +85℃
- 10-pin LGA, 2.7 mm x 2.7 mm x 1.7 mm
- Average current consumption: 1.7 μA for pressure measurement, 1.5 μA for temperature measurement at 1Hz sampling rate, 1x oversampling rate, Standby: 0.5 μA
- FIFO: Stores latest 32 pressure or temperature measurements
- Relative accuracy: ±0.03hPa
- Absolute accuracy: typ. 0.1hPa
- Pressure temperature sensitivity: < 0.5Pa/K

Typical applications

- Mobile Altimeter / Barometer
- Tracking and navigation (floor detection)
- Weather station
- Indoor Navigation and Map Assist
- Drones, gaming fly stabilization and vertical axis position
- Home appliances

诺思伟恩

Block Diagram

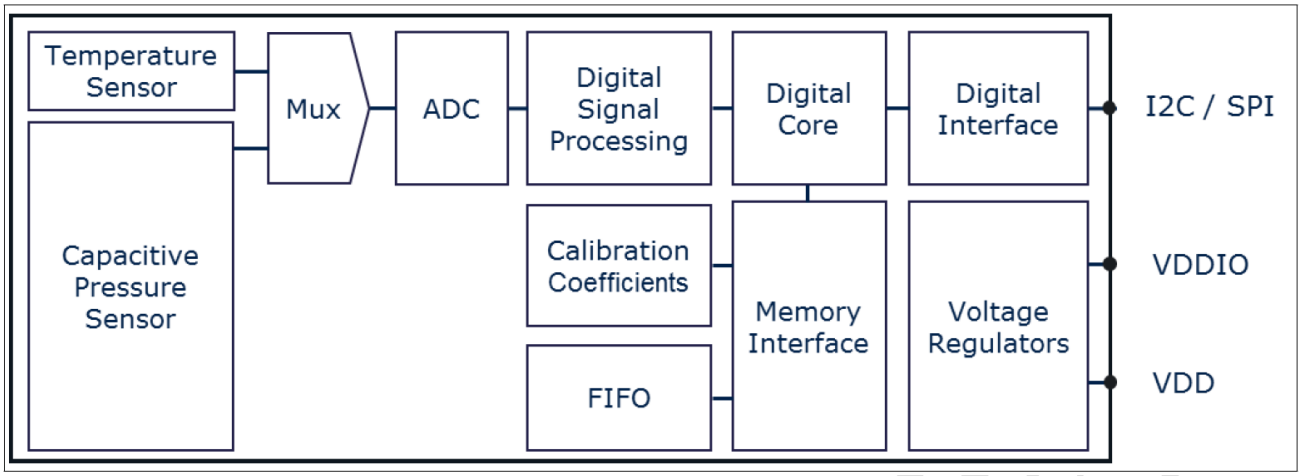

Figure 1 Block Diagram

1. Specifications

Test conditions (unless otherwise specified in the table): VDD= 1.8V and VDDIO=1.8V. Typ. values (TA=25°C). Max. / Min. values (TA=0...+65°C).

Table 1 Operating range

Parameter	Symbol	Min	Type	Max	Units	Note
Pressure	Pa	300		1200	hPa	
Temperature	Ta	-40		85	℃	
Supply voltage	VDD	1.7		3.6	V	
	VDDIO	1.08		3.6	V	
Supply voltage ramp-up time	t_{vddup}	0.001		5	ms	Time for supply voltage to reach 90% of final value.

Table 2 Absolute maximum ratings

Parameter	Symbol	Min	Type	Max	Units	Note
Voltage on any pin	V_{max}	-0.3		4.0	V	
Storage temperature	T_s	-40		125	℃	
Over pressure	P_{max}			10	Bar	
ESD	V_{ESD}	-2		2	KV	HBM (JESD22-A114)

Table 3 Current Consumption

Parameter	Symbol	Min	Type	Max	Units	Note
Peak Current Consumption	I_{peak}		375		uA	during Pressure measurement
			295			during Temperature measurement
Standby Current Consumption	I_{stb}		0.5			
Current Consumption.@1Hz	I_{1Hz}		3.2			Low precision (1xOSR for temperature and 2x OSR for pressure)

*Note: The current consumption depends on both pressure measurement precision and rate. Please refer to the **Pressure Configuration (PRS_CFG)** register description for an overview of the current consumption in different combinations of measurement precision and rate.*

Table 4 Temperature transfer function

Parameter	Symbol	Min	Type	Max	Units	Note
Temperature accuracy	A_t	-0.5		0.5	℃	@ 25℃
		-1.0		1.0	℃	0……60℃
Temperature data resolution	A_{t_res}		0.001		℃	
Temperature measurement rate	f	1		128	Hz	

诺思微

Table 5 Pressure transfer function

Parameter	Symbol	Min	Type	Max	Units	Note
Pressure precision (note 1)	A_{p_prc}		0.2		Pa_{RMS}	High precision mode 64x OSR
Relative pressure accuracy	A_{p_rel}	-6		6		950…1050hPa
Absolute pressure accuracy	A_{p_abs}	-100		100	hPa	300…1100hPa 0…60℃
Pressure data resolution	A_{p_psr}		0.06		Pa_{RMS}	1000hPa, 25...+40°C.
Pressure temperature sensitivity of calibrated measurements	A_{p_tmp}		0.5		Pa/K	
Pressure measurement rate	f	1		200	Hz	
Pressure measurement time	t		4.4		ms	Low Power mode (2xOSR)

Note 1: Pressure precision is measured as the average standard deviation. Please refer to the PRS_CFG register description for all precision mode options

Note 2: The pressure measurement time (and thus the maximum rate) depends on the pressure measurement precision. Please refer to the PRS_CFG register description for an overview of the possible combinations of measurement precision and rate

Table 6 Timing Characteristics

Parameter	Symbol	Min	Type	Max	Units	Note
Time to coefficients are available.	T_{Coef_rdy}			4	ms	TheCOEF_RDYbitinthe Measurement Configuration register will be set when the coefficients can be read out.
Time to sensor ready	T_{Sensor_rdy}			2	ms	The SENSOR_RDY bit in the Measurement Configuration register will be set when the sensor is ready.

Note: Start-up timing is measured from VDD > 1.2V & VDDIO > 0.6V or Soft Reset.

I^2CClock.	f_{I2C}			3.4	MHz	
SPIClock	f_{SPI}			10	MHz	

2. Pin Configuration

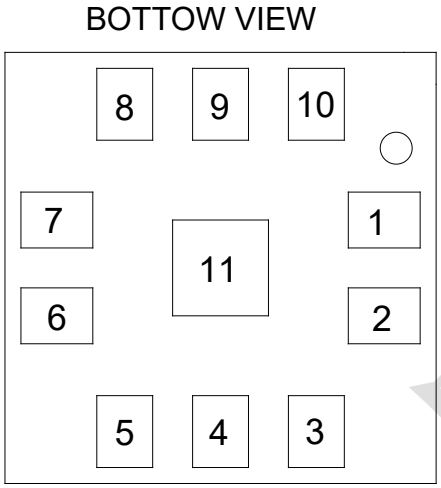

Figure2 Pin Configuration

Table7 Pin Descriptions

Pin	Name	SPI 3-wire	SPI 3-wire with interrupt	SPI 4-wire	I2C	I2C with interrupt
1	VDDIO	Digital supply voltage for digital blocks and I/O interface				
2	SCK	Serial Clock				
3	NC	Not used – open or tie to Ground				
4	SDI	Serial data in/out	Serial data in/out	Serial data in	Serial data in/out	Serial data in/out
5	SDO	Not used	Interrupt	Serial data out	Least significant bit in the device address.	Interrupt pin and least significant bit in the device address.
6	CSB	Chip select - active low	Chip select - active low	Chip select - active low	Not used - open (internal pull-up) or tie to VDDIO	Not used - open (internal pull-up) or tie to VDDIO
7	NC	Not used – open or tie to Ground				
8	GND	Ground				
9	GND	Ground				
10	VDD	Supply voltage for analog blocks				
11	GND	Ground				

3. Functional Description

3.1 Operating Modes

The NS2727 supports 3 different modes of operation: Standby, Command, and Back ground mode.

- Standby Mode
  - Default mode after power on or reset. No measurements are performed.
  - All registers and compensation coefficients are accessible.
- Command Mode
  - One temperature or pressure measurement is performed according to the selected precision.
  - The sensor will return to Standby Mode when the measurement is finished, and the measurement result will be available in the data registers.
- Background Mode
  - Pressure and/or temperature measurements are performed continuously according to the selected measurement precision and rate. The temperature measurement is performed immediately after the pressure measurement.
  - The FIFO can be used to store 32 measurement results and minimizes the number of times the sensor must be accessed to read out the results.

Note: *Operation mode and measurement type are set in the* ***Sensor Operating Mode and Status(MEAS_CFG)*** *register.*

3.2 Mode transition diagram

The mode transition diagram is shown below.

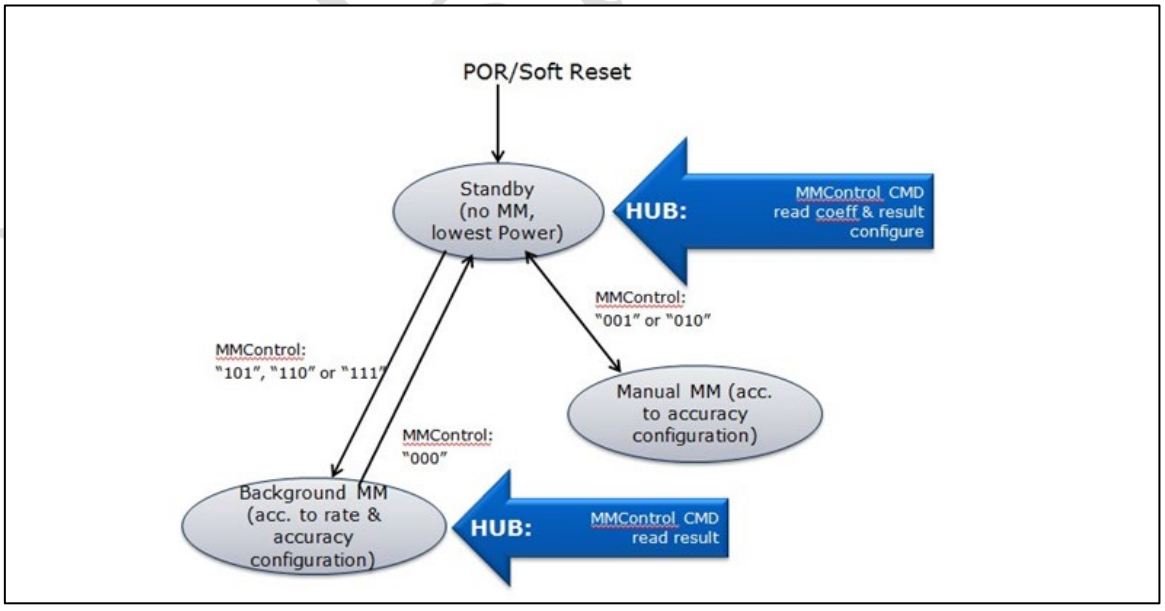

Figure7: Mode transition diagram

3.3 Start-up sequence

The star-up sequence of the NS2727 is as described below. It explains when the registers are accessible for read or write and also when the Pressure/Temperature measurements can start.

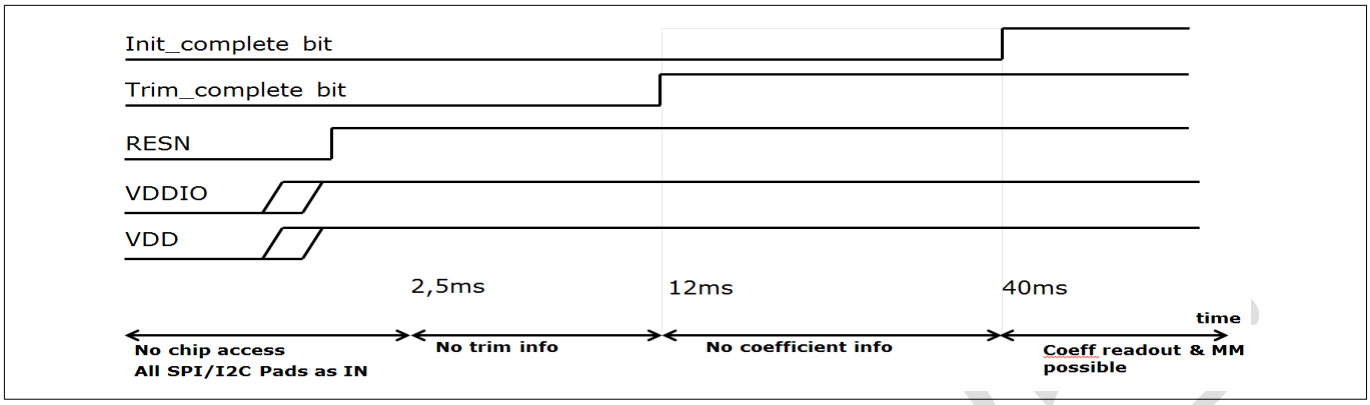

Figure 8: Start-up diagram

3.4 Measurement Precision and Rate

Different applications require different measurement precision and measurement rates. Some applications, like weather stations, require lower precision and measurement rates than for instance indoor navigation and sports applications.

The NS2727's measurement precision and rate (in background mode) can be configured to match the requirements of the application in which it is being used. This reduces current consumption of the sensor and the system.

In order to achieve a higher precision, the NS2727 will read the sensor multiple times (oversampling), and combine the readings into one result. This increases the current consumption and the measurement time, which again reduces the maximum measurement rate.

The measurement precision, rate and time is set in the ***Pressure Configuration (PRS_CFG)*** and ***Temperature Configuration (TMP_CFG)*** registers. The register descriptions contain information about the current consumption and the possible combinations of measurement precision, time, and rate.

Please note that the pressure sensor is temperature dependent. Temperature measurements must be made together with the pressure measurements in order to compensate for the temperature dependency. This reduces the maximum pressure measurement rate, since: $Rate_{temperature}$*$Time_{temperature}$ + $Rate_{pressure}$*$Time_{pressure}$< 1 second. Measurement settings and use case example contains a table with examples of combinations of pressure and temperature precision and rates for different use cases.

In the figure below the temperature and Pressure measurements sequence in background mode is described.

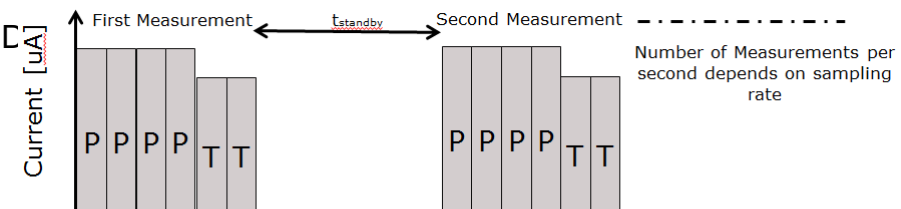

Figure9: measurements sequence

3.5 Sensor Interface

The NS2727 can be accessed as a slave device through mode'11'SPI3-wire, SPI4-wire, or I^2C serial interface.

- I^2C interface
  - The sensor's default interface.
  - The sensor's address is 0x77(default) or 0x76(if the SDO pin is pulled-down to GND).
- SPI interface
  - The sensor will switch to SPI configuration if it detects an active low on the CSB pin.SPI4-wire is the default SPI interface.
  - To enable SPI3-wire configuration, a bit must be set in the ***Interrupt and FIFO configuration (CFG_REG)*** Register after startup.

More details about digital interfaces are available in the ***Digital interfaces***.

3.6 Interrupt

The NS2727 can generate an interrupt when a new measurement result is available and/or when the FIFO is full.If the FIFO is disabled, an interrupt can be signaled when a new P or T result is available.

If the FIFO is enabled, only the FIFO full interrupt can be configured, the P/T result interrupts are not valid.

The sensor uses the SDO pin for the interrupt signal, and interrupt is therefore not supported if the interface is in 4 - wire SPI mode..

The interrupt is enabled and configured in the ***Interrupt and FIFO configuration (CFG_REG)***register. In I2C configuration the SDO pin serves as both interrupt and as the least significant bit in the device address. If the SDO pin is pulled low the interrupt polarity must be set to active high and vice versa.

The interrupt status can be read from the ***Interrupt Status (INT_STS)*** register.

3.7 Result Register Operation

After starting the measurements, the latest Pressure and Temperature raw data will be available in the Result registers. There are separate registers for Temperature and Pressure raw data. Temperature measurement can be skipped, skipping the measurement can be useful to measure Pressure extremely rapid.

All measurement data can be read in single command using auto-increment read. After reading the results registers all data will be available there until new measurement will be done. In case of using FIFO, after a read the register content will be 0x800000. A new results that may be produced will not interfere when reading Results Register.

3.8 FIFO Operation

The NS2727 FIFO can store the last 32 measurements of pressure or temperature. This reduces the overall system power consumption as the host processor does not need to continuously poll data from the sensor but can go into standby mode for longer periods of time.

The FIFO will store any combination of temperature and pressure measurements since the measurement rate of temperature and pressure can be set up independently in Background Mode. The pressure rate can for instance be set 4 times higher than the temperature rate and thus only every fifth result will be a temperature result. The measurement type can be seen in th**e result data. T**he sensor will set the least significant bit to:

- '1'if the result is a pressure measurement.
- '0'if it is a temperature measurement.
  - The sensor uses 24 bits to store the measurement result. Because this is more bits than is needed to cover the full dynamic range of the pressure sensor, using the least significant bit to label the measurement type will not affect the precision of the result.

The FIFO can be enabled in the ***Interrupt and FIFO configuration (CFG_REG)*** register. The data from the FIFO is read out from the ***Pressure Data (PRS_Bn)*** registers regardless of the next result in the FIFO is a temperature- or a pressure measurement.

When a measurement has been read out, the FIFO will auto increment and place the next result in the data register. A flag will be set in the ***FIFO Status (FIFO_STS)*** register when the FIFO is empty and all following reads will return 0x800000.

If the FIFO runs full a flag will be set in the ***FIFO Status (FIFO_STS)*** register and the sensor will generate an interrupt if this has been enabled in the ***Interrupt and FIFO configuration (CFG_REG)*** register.

The FIFO will stop recording measurements results when it is full.

The FIFO can be read out in two access modes - burst access and single access. If FIFO status resister indicates that the FIFO is full, the FIFO contains 32 entries. The FIFO can then read out in burst mode (32 values), or single read access mode. If the FIFO is not full (e.g. contains unknown data, indicated by the not set empty bit) the readout must be done in single access mode.

3.9 Calibration and Measurement Compensation

The NS2727 is a calibrated sensor and contains calibration coefficients. These are used in the application (for instance by the host processor) to compensate the measurement results for sensor non-linearities.

The sections that follow describe how to calculate the compensated results and convert them into Pa and ℃ values.

3.9.1 How to Calculate Compensated Pressure Values

Step

S1. Read the pressure calibration coefficients (c00,c10,c20,c30,c01,c11,andc21) from the Calibration Coefficient register

Note: *The coefficients read from the coefficient register are 2's complement numbers.*

S2. Choose scaling factors kT (for temperature) and kP (for pressure) based on the chosen precision rate. The scaling factors are listed in ***Table8***.

S3. Read the pressure and temperature result from the registers or FIFO.

Note: *The measurements read from the result registers (or FIFO) are 24bit 2´scomplement numbers. Depending on the chosen measurement rates, the temperature may not have been measured since the last pressure measurement.*

S4. Calculate scaled measurement results.

Example

$T_{raw_sc} = T_{raw}/kT$

$P_{raw_sc} = P_{raw}/kP$

S5. Calculate compensated measurement results.

$$Pressure(unit: pa)= c00+ P_{raw_sc}*(c10+ P_{raw_sc}*(c20+ P_{raw_sc}*c30)) + T_{raw_sc}*c01 + T_{raw_sc}*P_{raw_sc}*(c11+P_{raw_sc}*c21)$$

$$Temperature(°C) = c0*0.5 + c1*T_{raw_sc}$$

3.9.2 Compensation Scale Factors

Table8 CompensationScaleFactors

Oversampling Rate	Scale Factor (kP or kT)
1 (single)	524288
2 times (Low Power)	1572864
4 times	3670016
8 times	7864320
16 times (Standard)	253952
32 times	516096
64 times (High Precision)	1040384
128 times	2088960

4. Applications

4.1 Measurement Settings and use case example

Table9 Measurement Settings and Use Case Examples

Use Case	Performance	Pressure Register Configuration Address: 0x06	Temperature Register Configuration Address: 0x07	Other
Weather Station (Low power)	5 Pa precision. 1 pr sec. 3 uA	0x01	0x80	Start background measurements (addr 0x08)
Indoor navigation (Standard precision, Background mode)	10 cm precision. 2 pr sec. 22 uA	0x14	0x10	Enable P shift (addr 0x09) Start background measurements (addr 0x08)
Sports (High precision, high rate, background mode)	5 cm precision 4 pr sec. 200 uA	0x26	0x20	Enable P shift (addr 0x09) Start background measurements (addr 0x08)

4.2 Application and Circuit Examples

The bonding diagram example used for electrical connecting the MEMS Sensor and ASIC is presenting below.

The examples application circuit uses the I2C and SPI serial interface. The SDO pin can be used for interrupt or to set least significant bit of the device address. The NS2727 analog core supply voltage is released by an internal voltage regulator which makes the sensor cell biasing circuit robust to full range of external VDD supply source. The simplest solution for voltage supply of NS2727 is to connect together VDD and VDDIO to 1.8V supply voltage and add suitable decoupling capacitor to reduce the VDD ripple below 50mVpp

Figure3: Application Circuit Example using the I2C serial interface.

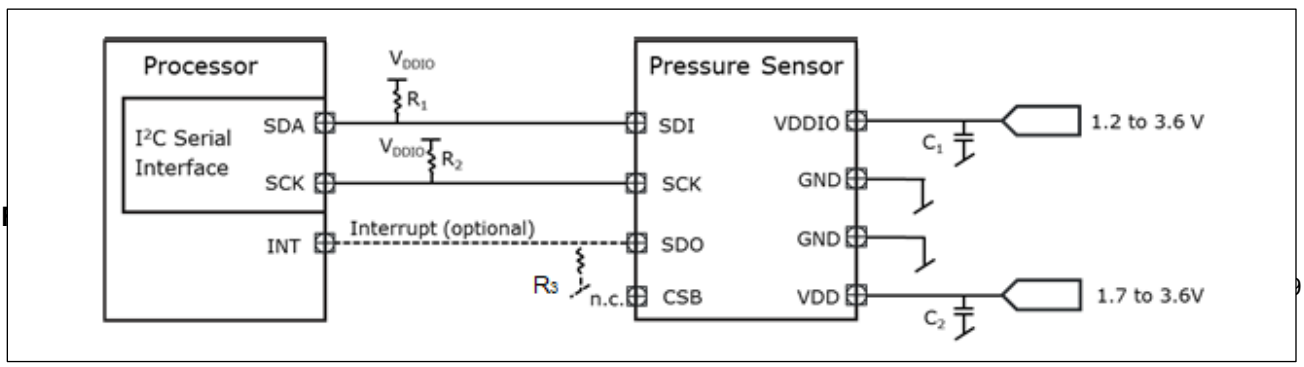

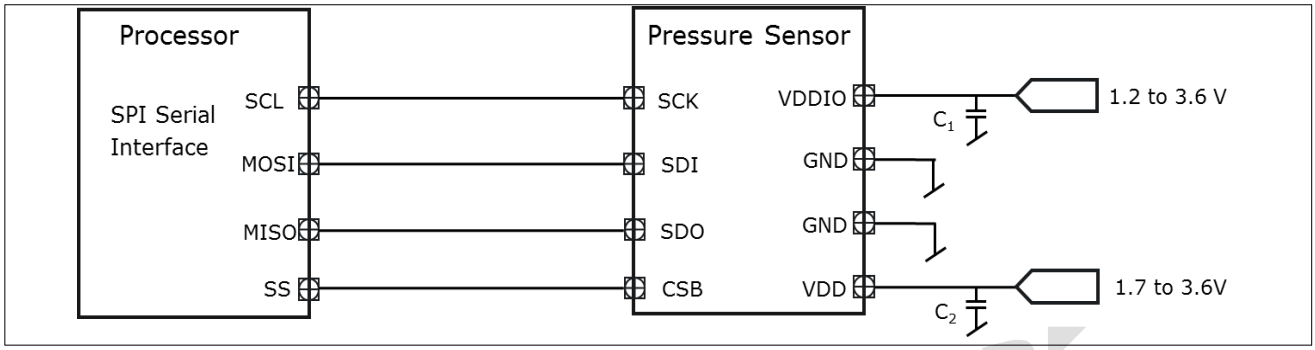

Figure5: Application Circuit Example using the SPI 3-wire serial interface

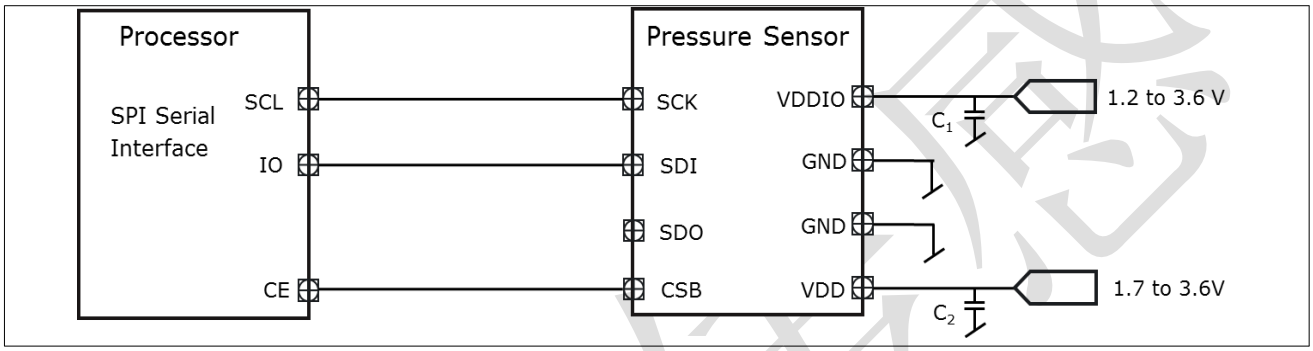

Figure6: Application Circuit Example using the SPI 3-wire with interrupt interface

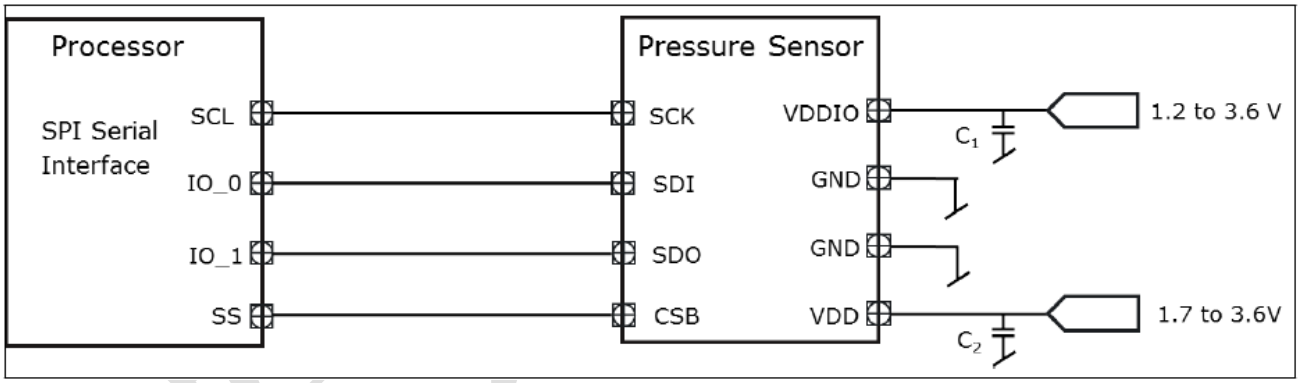

Table10 Component Values

Component	Symbol	Values			Unit	Note/Test Condition
		Min.	Typ.	Max.		
Pull-up/down Resistor	R_1,R_2	5		100	KΩ	R_2 is optional and will set the address to 0x76 instead of 0x77.
Supply Blocking Capacitor	C_1,C_2	100	100		nF	The blocking capacitors should be placed as close to the package pins as possible.

5. Digital interfaces

The NS2727 measurement data, calibration coefficients, Product ID and configuration registers can be accessed through both the I²C and SPI serial interfaces.

The SPI interface can be configured to operate in 3-wire or 4-wire interface mode, also both interfaces can support interrupt mode. The SPI interface support mode '11' only (CPOL=CPHA='1') in 4-wire and 3-wire configuration. The following commands are supported: single byte write, single byte read and multiple byte read using a single register address which is auto-incremented.

The interface selection is done based on CSB pin status. If CSB is connected to VDDIO, the I2C interface is active.

If CSB is pulled down, the SPI interface is active. After the CSB has been pulled down once the I2C interface is disabled until the next power-on-reset. If the chip is accessed by the I2C interface, the chip remains in I2C configuration does not respond to a pulled down CSB (SPI disabled).

5.1 I2CInterface

The I²C slave interface is compatible with Philips I²C Specification version2.1.The I²C interface supports standard, fast and high speed mode.

The sensor's address is 0x77(if SDO pin is left floating or pulled-up to VDDIO) or 0x76(if the SDO pin is pulled-down to GND). The I²C interface uses the pins described in ***Table7***

The basic timing is shown in the diagram below:

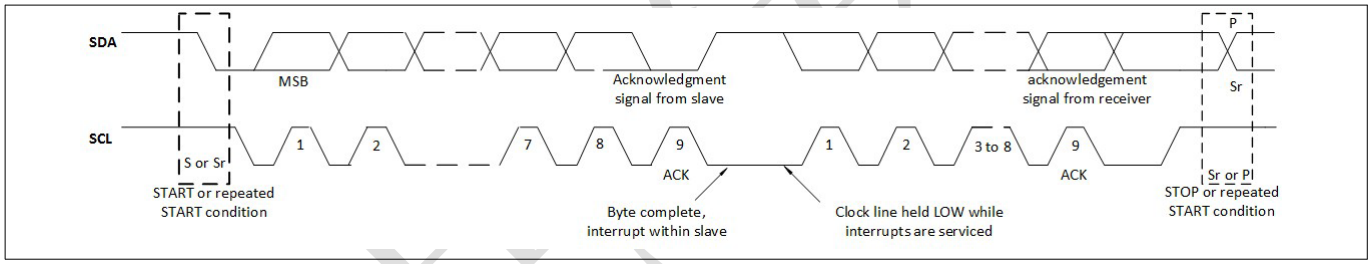

Figure7 I2Ctimingdiagram

In one access, without stop, incremental read (address is auto increment) and auto-incremental write is supported. The read and write access is described below:

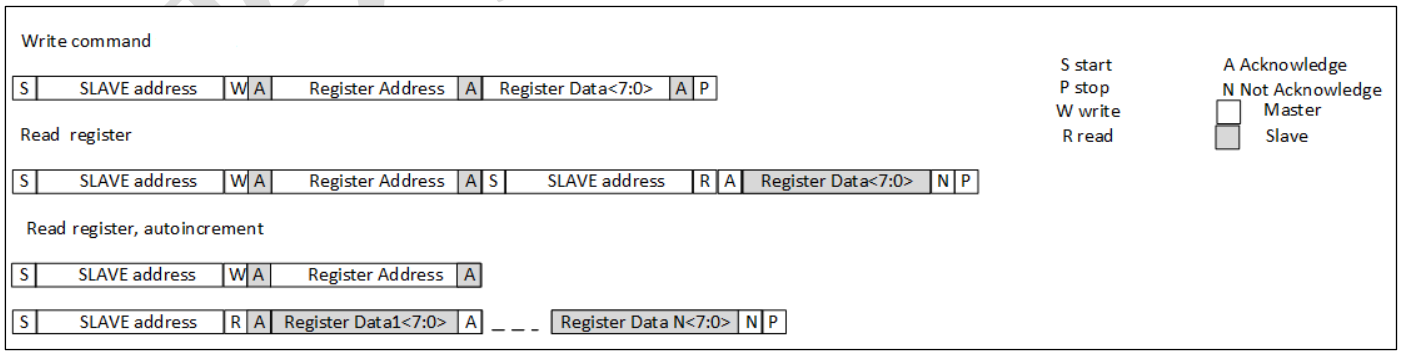

Figure8 I2C write and read commands

5.2 SPI Interface

The SPI interface is compatible with SPI mode'11'(CPOL=CPHA='1'.The SPI interface has two modes:4-

wire and3-wire.
The protocol is the same for both. The 3-wire mode is selected by setting '1' to the register ***Interrupt and FIFO configuration (CFG_REG)***
The SPI interface uses the pins like in the ***Table7***. Refer to ***Application Circuit Example*** for connections instructions, The SPI protocol is shown in the diagram below

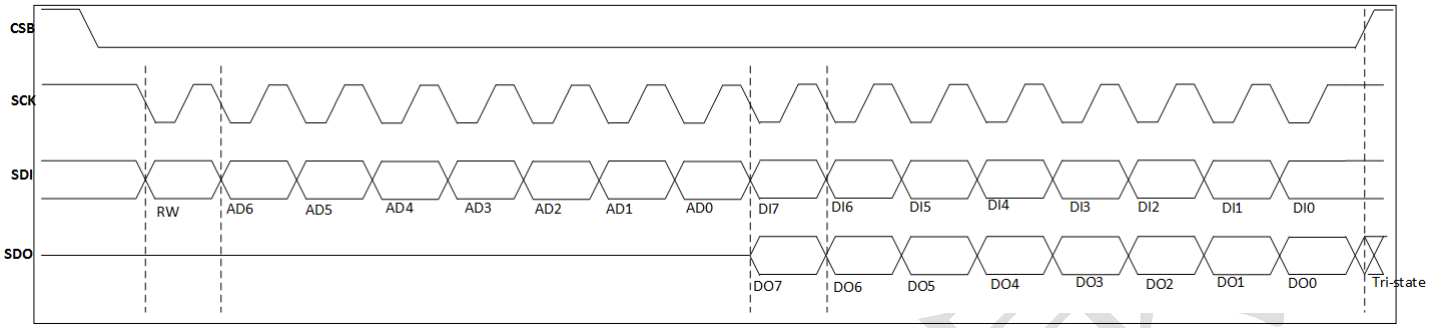

Figure9 SPIprotocol,4-wirewithoutinterrupt

A SPI write is carried out by setting CSB low and sending a control byte followed by register data. The control byte consist of the SPI register address (full register address without bit 7) and the write command (bit7 = RW ='0'). Setting CSB high ends the transaction. The SPI write protocol is described in the diagram below.
A SPI read is initiated by setting CSB low and sending a single control byte. The control byte consist of the SPI
Register address (= full register address without bit 7) and the read command (bit7 = RW = '1'). After writing the control byte, data is sent out of the SDO pin (SDI in 3-wire mode); the register address is automatically incremented. Sending CSB high ends the SPI read transaction. The SPI read protocol is shown in the diagram Below:

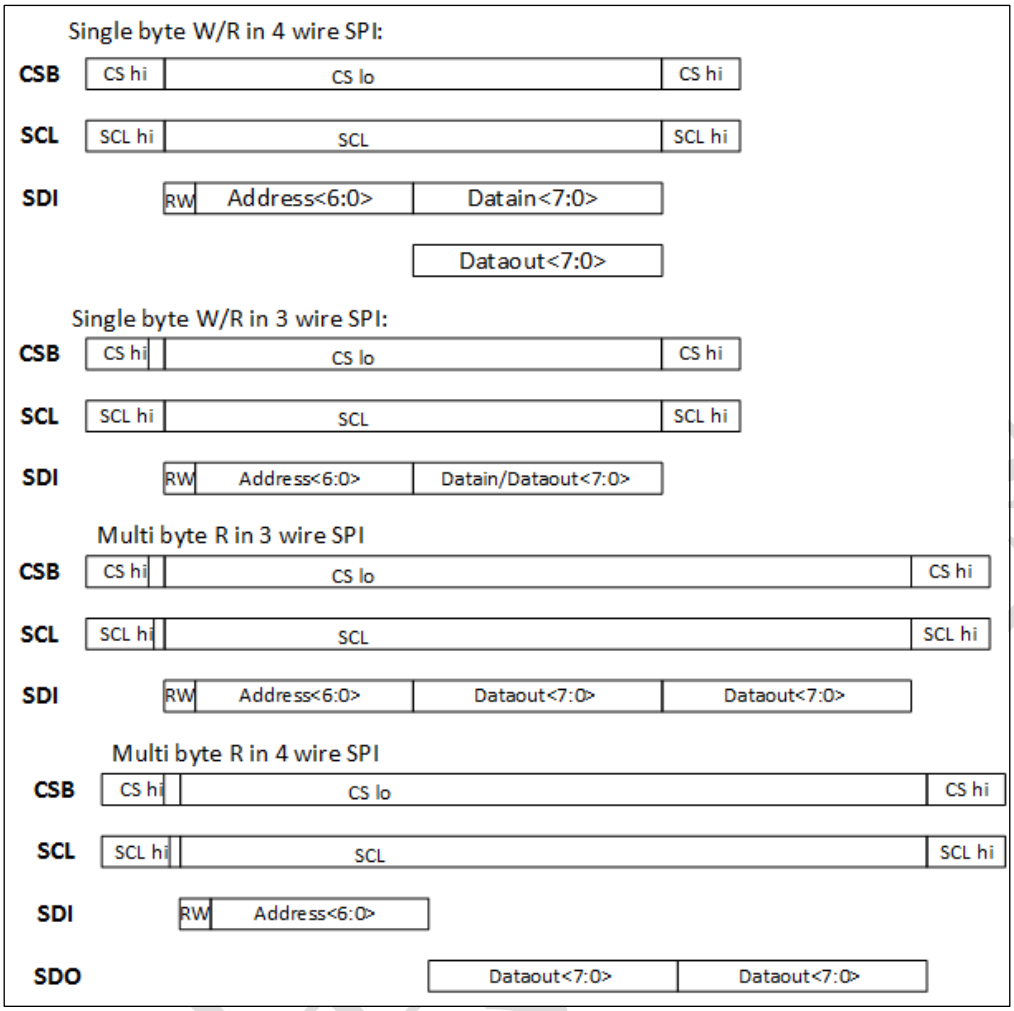

Figure 10 SPI write, read protocol diagrams

5.3 Interface parameters specification

The general interface parameters are given in the table below:

Table11 Interface parameters

Parameter	Symbol	Values			Unit	Note or Test Condition
		Min.	Typ.	Max.		
Input voltage for low logic level at input pins	Vlow_in			0.3* V_{DDIO}	V	V_{DDIO}=1.08V to 3.6V
Input voltage for high logic level at input pins	Vhigh_in	0.7* V_{DDIO}			V	V_{DDIO}=1.08V to 3.6V
Output-low level for I2C	Vlow_SDI			0.1* V_{DDIO}	V	V_{DDIO}=1.8V, iol=2mA
Output voltage for low level at pin SDI for I2C	Vlow_SDI_1.08			0.2* V_{DDIO}	V	V_{DDIO}=1.08V, iol=1.3mA
Output voltage for high level at pins SDO,SDI	Vhigh_out	0.8* V_{DDIO}			V	V_{DDIO}=1.8V, iol=1mA(SDO, SDI)

Output voltage for high level at pins SDO,SDI	Vhigh_out_1.08	0.6* V_{DDIO}			V	V_{DDIO}=1.2V, iol=1mA(SDO, SDI)
Pull-up resistor	Rpull	60	120	180	kohm	Internal pull-up resistance to VDDIO
I2C bus load capacitor	Cb			400	pF	On SDI and SCK

5.3.1 I2C timings

The I^2C timing is shown in the diagram below and corresponding values are given in the table below. The naming refers to I^2C Specification version2.1, the abbreviations used "S&F mode" = standard and fast mode, "HSmode" = high speed mode, Cb = bus capacitance on SDA line.

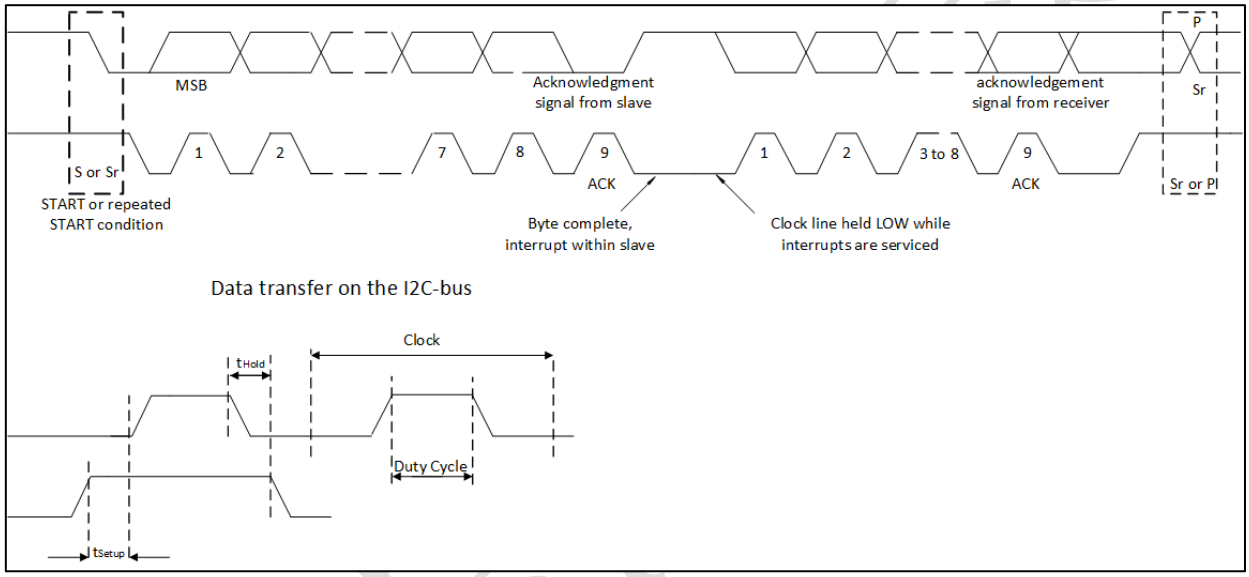

Figure 15 I2C timing diagram

Table 12 I2C timings

Parameter	Symbol	Values			Unit	Note or Test Condition
		Min.	Typ.	Max.		
Data setup time on SDI pin	t_{Setup}	20			ns	S&F mode
		5			ns	HS mode
Data hold time on SDI pin	t_{Hold}	0			ns	S&F&HS mode,
Duty Cycle	DC			70	%	S&F mode,
				55	%	HS mode,

5.3.2 SPI timings

The SPI timing diagram is shown in the figure below and the corresponding values are given in the table below. All timings apply both to 4-wire and 3-wire SPI.

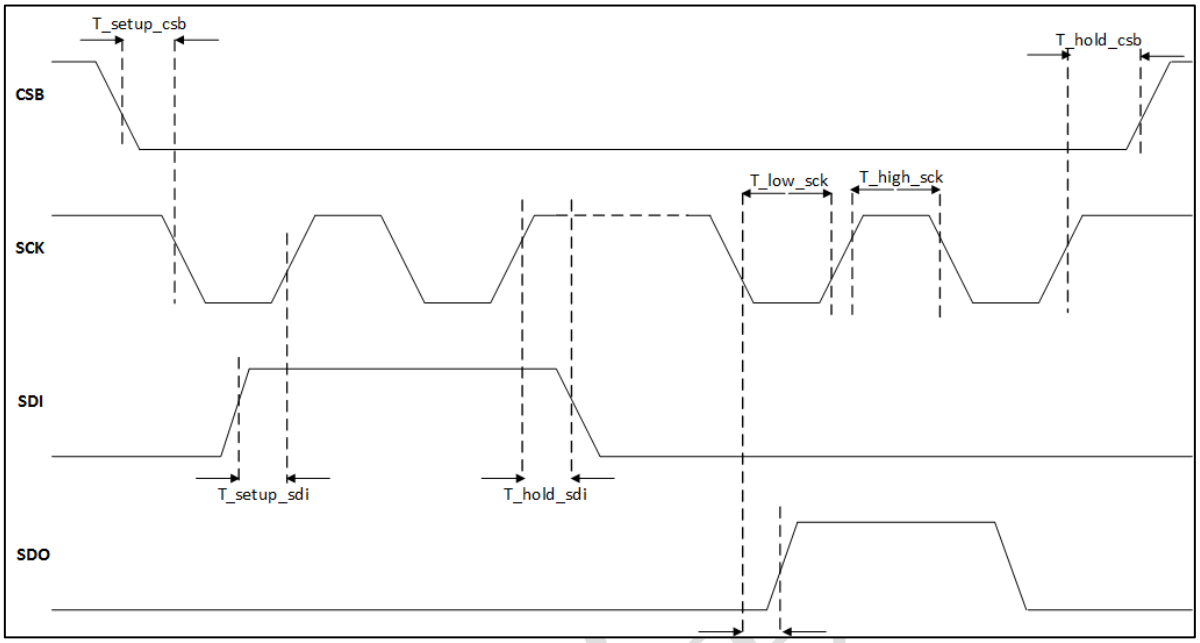

Figure 16 SPI timing diagram

Table13 SPI timings

Parameter	Symbol	Values			Unit	Note or Test Condition
		Min.	Typ.	Max.		
Duty Cycle(Thigh%)	SPI_DC	30			%	V_{DDIO}=1.08V
		20			%	V_{DDIO}=1.8V/3.6V
SDI setup time	T_setup_sdi	2			ns	
SDI hold time	T_hold_sdi	2			ns	
Clock	SPI_CLK			10	MHz	
CSB setup time	T_setup_csb	15			ns	
CSB hold time		15			ns	

6. Register Map

Table14RegisterMap

Register Name	Addr.	bit7	bit6	bit5	bit4	bit3	bit2	bit1	bit0	Reset State
PSR_B2	0x00	PSR[23:16](r)								00_h
PSR_B1	0x01	PSR[15:8](r)								00_h
PSR_B0	0x02	PSR[7:0](r)								00_h
TMP_B2	0x03	TMP[23:16](r)								00_h
TMP_B1	0x04	TMP[15:8](r)								00_h
TMP_B0	0x05	TMP[7:0](r)								00_h
PRS_CFG	0x06	PM_RATE[7:4](rw)				PM_PRC[3:0](rw)				00_h
TMP_CFG	0x07	TMP_RATE[7:4](rw)				TM_PRC[3:0](rw)				00_h
MEAS_CFG	0x08	COEF_ RDY(r)	SENSOR _RDY(r)	TMP_ RDY(r)	PRS_ RDY(r)	TMP EXT(rw)	MEAS_CRTL[2:0](rw)			00_h
CFG_REG	0x09	INT_HL (rw)	INT_SEL[2:0](rw)			TMP_ SHIFT_ EN(rw)	PRS_ SHIFT_ EN(rw)	FIFO_ EN(rw)	SPI_ MODE (rw)	00_h
INT_STS	0x0A	-	-	-	-	-	INT_ FIFO_ FULL(r)	INT_ TMP(r)	INT_ PRS(r)	00_h
FIFO_STS	0x0B	-	-	-	-	-	-	FIFO_ FULL(r)	FIFO_ EMPTY(r)	00_h
RESET	0x0C	FIFO_ FLUSH (w)	-	-	-	SOFT_RST[3:0](w)				00_h
COEF	0x10-0x21	<see register description>								XX_h

诺思传感

7. Register description

7.1 Pressure Data (PRS_Bn)

The Pressure Data registers contains the 24 bit (3bytes) 2's complement pressure measurement value. If the FIFO is enabled, the register will contain the FIFO pressure and/or temperature results. Otherwise, the register contains the pressure measurement results and will not be cleared after read.

Register	Field	Bits	Type	Description
0x00	PRS[23:16]	[7:0]	r	MSB of 24 bit 2´s complement pressure data.
0x01	PRS[15:8]	[7:0]	r	LSB of 24 bit 2´s complement pressure data.
0x02	PRS[7:0]	[7:0]	r	XLSB of 24 bit 2´s complement pressure data.

```
Praw=(PRS[7:0]) + (PRS[15:8]<<8) + (PRS[23:16]<<16);
if(Praw>8388607)
{
    Praw=Praw-16777216;
}
```

7.2 Temperature Data (TMP_Tn)

The Temperature Data registers contain the 24 bit (3 bytes) 2's complement temperature measurement value(Unless the FIFO is enabled, please see FIFO operation) and will not be cleared after the read.

Register	Field	Bits	Type	Description
0x03	TMP[23:16]	[7:0]	r	MSB of 24 bit 2´s complement temperature data.
0x04	TMP[15:8]	[7:0]	r	LSB of 24 bit 2´s complement temperature data.
0x05	TMP[7:0]	[7:0]	r	XLSB of 24 bit 2´s complement temperature data.

```
Traw=(TMP[7:0]) + (TMP[15:8]<<8) + (TMP[23:16]<<16);

if(Traw > 8388607)
{
    Traw=Traw-16777216;
}
```

7.3 Pressure Configuration (PRS_CFG)

Configuration of pressure measurement rate (PM_RATE) and resolution (PM_PRC)

PRS_CFG **Address:** 06_H

Pressure measurement configuration **Reset value:** 00_H

7	6	5	4	3	2	1	0
	PM_RATE[3:0]			**PM_PRC[3:0]**			
-	rw			rw			

Field	Bits	Type	Description
PM_RATE[2:0]	7:4	rw	Pressure measurement rate: 0000- 1 sample/sec 0001- 2 sample/sec 0010- 4 sample/sec. 0011- 8 sample/sec.. 0100- 16 sample/sec. 0101- 32 sample/sec. 0110- 64 sample/sec. 0111- 128 sample/sec. 1000- 25/16 sample/sec.. 1001- 25/8 sample/sec. 1011- 25/4 sample/sec. 1100- 25 sample/sec. 1101- 50 sample/sec. 1110- 100 sample/sec. 1111- 100 sample/sec. *Applicable for measurements in Background mode only*
PM_PRC[3:0]	3:0	rw	Pressure oversampling rate: 0000-Single.(Low Precision) 0001-2times(Low Power). 0010-4times. 0011-8times. 0100*)-16times(Standard). 0101*)-32times. 0110*)-64times(High Precision). 0111*)-128times. 1xxx-TBD

*Note: Use in combination with a bit shift. See ***Interrupt and FIFO configuration (CFG_REG)*** register

Table15 Precision (Pa_{RMS}) and Pressure measurement time(ms) versus oversampling rate

Oversampling (PRC[3:0])	**Single (0000)**	**2times (0001)**	**4times (0010)**	**8times (0011)**	**16times (0100)**	**32times (0101)**	**64times (0110)**	**128 times (0111)**
Measurementtime (ms)	2.7	4.4	7.5	14.0	26.9	52.8	104.6	208.1
Precision(Pa_{RMS})	2.5	1.0	0.5	0.4	0.35	0.3	0.2	

Note: The table shows the possible combinations of Pressure Measurement Rate and oversampling when no temperature measurements are performed. When temperature measurements are performed the possible combinations are limited to $Rate_{temperature}$ *x Measurement* $Time_{temperature}$ + $Rate_{pressure}$ *x Measurement* $Time_{pressure}$ *< 1 second(if the time is >1 second then the chip could lead to unpredictable data rate).*

诺思传感

7.4 Temperature Configuration(TMP_CFG)

Configuration of temperature measurement rate (TMP_RATE) and resolution (TMP_PRC)

TMP_CFG **Address:** 07_H

Temperature measurement configuration **Reset value:** 00_H

7	6	5	4	3	2	1	0
TMP_RATE[3:0]				TMP_PRC[3:0]			
rw				rw			

Field	Bits	Type	Description
TMP_RATE[2:0]	6:4	rw	Temperature measurement rate: 0000- 1 sample/sec 0001- 2 sample/sec 0010- 4 sample/sec. 0011- 8 sample/sec.. 0100- 16 sample/sec. 0101- 32 sample/sec. 0110- 64 sample/sec. 0111- 128 sample/sec. 1000- 25/16 sample/sec.. 1001- 25/8 sample/sec. 1011- 25/4 sample/sec. 1100- 25 sample/sec. 1101- 50 sample/sec. 1101- 100 sample/sec. 1111- 200 sample/sec. *Applicable for measurements in Background mode only*
TMP_PRC[2:0]	2:0	rw	Temperatureoversampling(precision): 000-single.(Default) 0001-2times. 0010-4times. 0011-8times. 0100-16times. 0101-32times. 0110-64times. 0111-128times. 1xxx-TBD *Note: temperature measurement time is same as pressure measurement time, refer to table 15.*

7.5 Sensor Operating Mode and Status (MEAS_CFG)

Setup measurement mode

MEAS_CFG	**Address:**	08H
Measurement configuration	**Reset value:**	00H

7	6	5	4	3	2	1	0
COEF_RDY	SENSOR_RDY	TEM_RDY	PRS_RDY	-	MEAS_CTRL		
r	r	r	r	-	rw		

Field	Bits	Type	Description
COEF_RDY	7	r	Coefficients will be read to the Coefficients Registers after start-up: 0-Coefficients are not available yet. 1-Coefficients are available.
SENSOR_RDY	6	r	The pressure sensor is running through self-initialization after start-up. 0-Sensor initialization not complete 1 - Sensor initialization complete It is recommended not to start measurements until the sensor has completed the self-initialization.
TMP_RDY	5	r	Temperature measurement ready 1-New temperature measurement is ready. Cleared when temperature measurement is read.
PRS_RDY	4	r	Pressure measurement ready 1-New pressure measurement is ready. Cleared when pressure measurement is read.
-	3	-	Reserved.
MEAS_CTRL	2:0	rw	Set measurement mode and type: *Standby Mode* 000- Idle /Stop background measurement *Command Mode* 001-Pressure measurement 010-Temperature measurement 011-na. 100-na. *Background Mode* 101-Continuous pressure measurement 110-Continuous temperature measurement 111-Continuous pressure and temperature measurement

7.6 Interrupt and FIFO configuration (CFG_REG)

Configuration of interrupts, measurement data shift, and FIFO enable.

CFG_REG **Address:** 09H

Configuration register **Reset value:** 00H

7	6	5	4	3	2	1	0
INT_HL	INT_FIFO	INT_TMP	INT_PRS	T_SHIFT	P_SHIFT	FIFO_EN	SPI_MODE
rw	rw	rw	rw	rw	rw	rw	rw

Field	Bits	Type	Description
INT_HL	7	rw	Interrupt(on SDO pin) active level: 0-Active low. 1-Active high.
INT_FIFO	6	rw	Generate interrupt when the FIFO is full: 0-Disable. 1-Enable.
INT_TMP	5	rw	Generate interrupt when a temperature measurement is ready: 0-Disable. 1-Enable.
INT_PRS	4	rw	Generate interrupt when a pressure measurement is ready: 0-Disable. 1-Enable.
T_SHIFT	3	rw	Temperature result bit-shift 0-no shift. 1-shift result right in data register. *Note:Must be set to '1' when the oversampling rate is > 8times.*
P_SHIFT	2	rw	Pressure result bit-shift 0-no shift. 1-shift result right in data register. *Note:Must be set to '1' when the oversampling rate is > 8times.*
FIFO_EN	1	rw	Enable the FIFO: 0-Disable. 1-Enable.
SPI_MODE	0	rw	Set SPI mode: 0-4-wire interface. 1-3-wire interface.

7.7 Interrupt Status (INT_STS)

Interrupt status register. The register is cleared on read.

INT_STS **Address:** 0A$_H$

Interrupt status **Resetvalue:** 00$_H$

7	6	5	4	3	2	1	0
-					INT_FIFO_FULL	INT_TMP	INT_PRS
					r	r	r

Field	Bits	Type	Description
-	7:3	-	Reserved.
INT_FIFO_FULL	2	r	Status of FIFO interrupt 0 - Interrupt not active 1 - Interrupt active
INT_TMP	1	r	Status of temperature measurement interrupt 0 - Interrupt not active 1 - Interrupt active
INT_PRS	0	r	Status of pressure measurement interrupt 0 - Interrupt not active 1 - Interrupt active

诺思微

7.8 FIFO Status (FIFO_STS)

FIFO status register

FIFO_STS	Address:	0BH
FIFOstatus register	Resetvalue:	00H

7	6	5	4	3	2	1	0
-						FIFO_FULL	FIFL_EMPTY
-						r	r

Field	Bits	Type	Description
-	7:2	-	Reserved.
FIFO_FULL	1	r	0-The FIFO is not full 1-The FIFO is full
FIFO_EMPTY	0	r	0-The FIFO is not empty 1-The FIFO is empty

7.9 Soft Reset and FIFO flush (RESET)

Flush FIFO or generate soft reset.

RESET	Address:	0CH
FIFOflushandsoftreset	Resetvalue:	00H

7	6	5	4	3	2	1	0
FIFO_FLUSH	-			SOFT_RST			
w	-			w			

Field	Bits	Type	Description
FIFO_FLUSH	7	w	FIFO flush 1-Empty FIFO After reading out all data from the FIFO, write '1' to clear all old data.
-	6:4	-	Reserved.
SOFT_RST	3:0	w	Write '1001' to generate a soft reset. A soft reset will run through the same sequences as in power-on reset.

7.10 Calibration Coefficients (COEF)

The Calibration Coefficients register contains the 2´s complement coefficients that are used to calculate the compensated pressure and temperature values.

Table17 CalibrationCoefficients

Coefficient	Addr.	bit7	bit6	bit5	bit4	bit3	bit2	bit1	bit0
c0	0x10	c0[11:4]							
c0/c1	0x11	c0[3:0]				c1[11:8]			
c1	0x12	c1[7:0]							
c00	0x13	c00[19:12]							
c00	0x14	c00[11:4]							
c00/c10	0x15	c00[3:0]				c10[19:16]			
c10	0x16	c10[15:8]							
c10	0x17	c10[7:0]							
c01	0x18	c01[15:8]							
c01	0x19	c01[7:0]							
c11	0x1A	c11[15:8]							
c11	0x1B	c11[7:0]							
c20	0x1C	c20[15:8]							
c20	0x1D	c20[7:0]							
c21	0x1E	c21[15:8]							
c21	0x1F	c21[7:0]							
c30	0x20	c30[15:8]							
c30	0x21	c30[7:0]							

Note: Generate the decimal numbers out of the calibration coefficients registers data:

诺思传感

8. Package dimensions

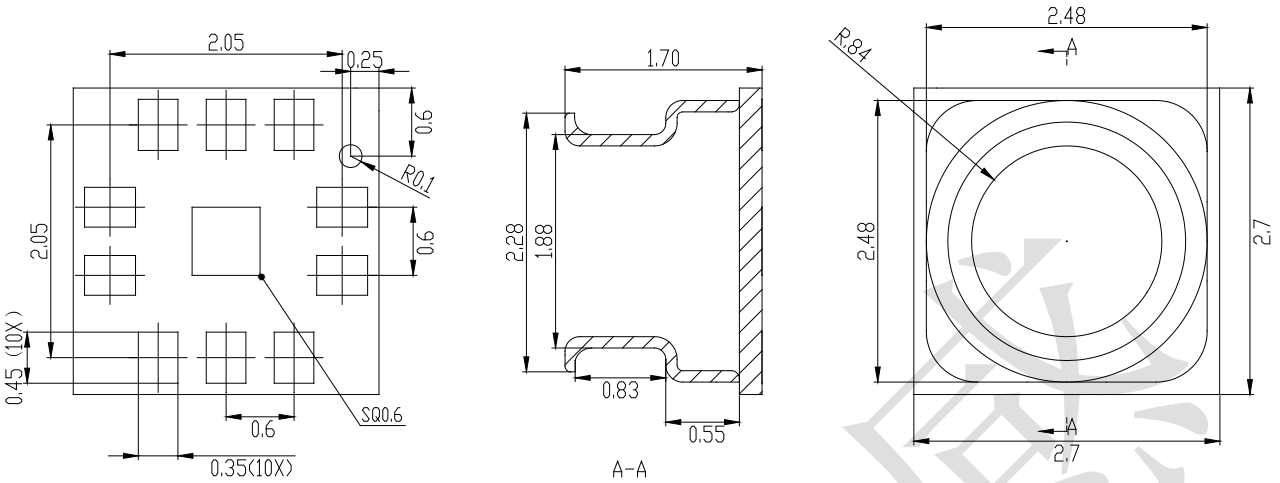

Notes:

(1) Unit: mm

(2) Tolerance: 0.10mm

诺思华芯