MP1907

100V, 2.5A, High Frequency Half-bridge Gate Driver

The Future of Analog IC Technology

DESCRIPTION

The MP1907 is a high frequency, 100V half bridge N-channel power MOSFET driver. Its low side and high side driver channels are independently controlled and matched with less than 5ns in time delay. Under-voltage lock-out both high side and low side supplies force their outputs low in case of insufficient supply. Both outputs will remain low until a rising edge on either input is detected. The integrated bootstrap diode reduces external component count.

FEATURES

- Drives N-channel MOSFET half bridge
- 100V V_{BST} voltage range
- Input signal overlap protection
- On-chip bootstrap diode
- Typical 20ns propagation delay time
- Less than 5ns gate drive mismatch
- Drive 1nF load with 12ns/9ns rise/fall times with 12V VDD
- TTL compatible input
- Less than 150μA quiescent current
- Less than 5μA shutdown current
- UVLO for both high side and low side
- In 3×3mm QFN10 Packages

APPLICATIONS

- Battery Powered Hand Tool
- Telecom half bridge power supplies
- Avionics DC-DC converters
- Active-clamp Forward Converters

All MPS parts are lead-free and adhere to the RoHS directive. For MPS green status, please visit MPS website under Products, Quality Assurance page.

"MPS" and "The Future of Analog IC Technology" are registered trademarks of Monolithic Power Systems, Inc.

TYPICAL APPLICATION

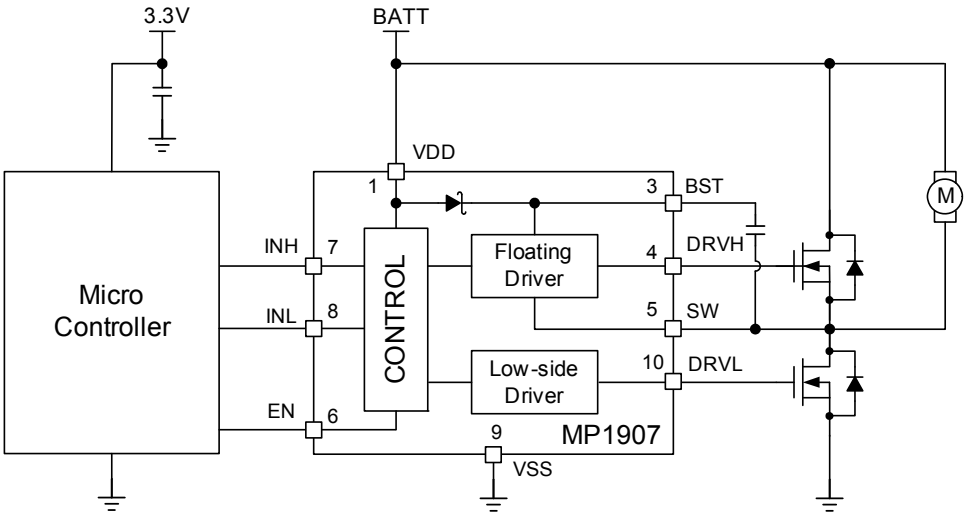

MPS Proprietary Information. Patent Protected. Unauthorized Photocopy and Duplication Prohibited.
© 2014 MPS. All Rights Reserved.

ORDERING INFORMATION

Part Number*	Package	Top Marking
MP1907GQ	QFN10 (3 x 3 mm)	ADE

* For Tape & Reel, add suffix –Z (e.g. MP1907GQ–Z);

PACKAGE REFERENCE

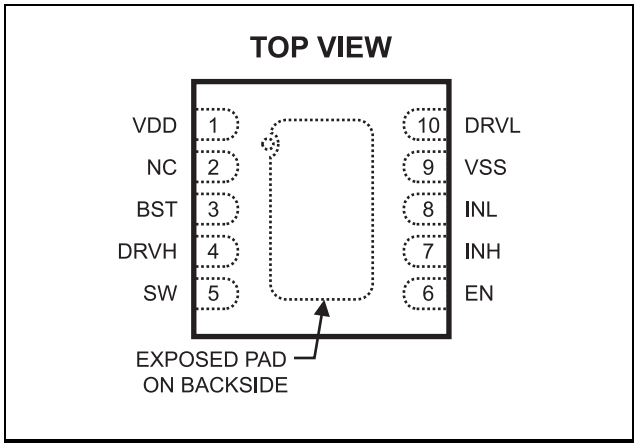

ABSOLUTE MAXIMUM RATINGS (1)

Supply Voltage (V_{DD}).....-0.3V to +20V
SW Voltage (V_{SW}) .....-5.0V to 105V
BST Voltage (V_{BST}) .....-0.3V to 110V
BST to SW .....-0.3V to +18V
DRVH to SW..... -0.3V to (BST-SW) +0.3V
DRVL to VSS ..... -0.3V to (V_{DD}+0.3V)
All Other Pins.....-0.3V to 20V
Continuous Power Dissipation (T_A =+25°C) (2)
QFN10 (3x3) 2.5W
Junction Temperature.....150°C
Lead Temperature .....260°C
Storage Temperature..... -65°C to +150°C

Recommended Operating Conditions (3)

Supply Voltage (V_{DD})..... +4.5V to 18V (4)
SW Voltage (V_{SW}) .....-1.0V to 100V
SW slew rate.....<50V/nsec
Operating Junction Temp. (T_J). -40°C to +125°C

Thermal Resistance (5)

	θ_{JA}	θ_{JC}	
QFN10 (3x3)	50	12	°C/W

Notes:

1) Exceeding these ratings may damage the device.
2) The maximum allowable power dissipation is a function of the maximum junction temperature T_J (MAX), the junction-to-ambient thermal resistance θ_{JA}, and the ambient temperature T_A. The maximum allowable continuous power dissipation at any ambient temperature is calculated by P_D (MAX) = (T_J (MAX)-T_A)/θ_{JA}. Exceeding the maximum allowable power dissipation will cause excessive die temperature, and the regulator will go into thermal shutdown. Internal thermal shutdown circuitry protects the device from permanent damage.
3) The device is not guaranteed to function outside of its operating conditions.
4) 4.5V is only a typical value for minimum supply voltage at V_{DD} falling
5) Measured on JESD51-7, 4-layer PCB.

MPS Proprietary Information. Patent Protected. Unauthorized Photocopy and Duplication Prohibited.
© 2014 MPS. All Rights Reserved.

ELECTRICAL CHARACTERISTICS

V_{DD} = V_{BST}-V_{SW}=12V, V_{SS}=V_{SW} = 0V, V_{EN}=3.3V, No load at DRVH and DRVL, T_A= +25°C, unless otherwise noted.

Parameter	Symbol	Condition	Min	Typ	Max	Units
Supply Current						
VDD Shutdown Current	I_{SHDN}	V_{EN}=0,		0	1	μA
VDD quiescent current	I_{DDQ}	INL=INH=0		80	100	μA
VDD operating current	I_{DDO}	fsw=500kHz		2.8	3.5	mA
Floating driver quiescent current	I_{BSTQ}	INL=0, INH=0 or 1		55	70	μA
Floating driver operating current	I_{BSTO}	fsw=500kHz		2.1	3	mA
Leakage Current	I_{LK}	BST=SW=100V		0.05	1	μA
Inputs						
INL/INH High			2.4			V
INL/INH Low					1	V
INL/INH Hysteresis				0.6		V
INL/INH internal pull-down resistance	R_{IN}			185		kΩ
Under Voltage Protection						
VDD rising threshold	V_{DDR}		4.6	5.0	5.4	V
VDD falling threshold	V_{DDF}		4.1	4.5	4.9	V
(BST-SW) rising threshold	V_{BSTR}		4.6	5.0	5.4	V
(BST-SW) falling threshold	V_{BSTF}		4.1	4.5	4.9	V
EN Input Logic Low					0.7	V
EN Input Logic High			1.5			V
EN Hysteresis				100		mV
EN Input Current	I_{EN}	V_{EN}=2V, T_A=+25°C		10		μA
		V_{EN}=5V, T_A=-10°C to +70°C			35 (6)	μA
EN internal pull-down resistance	R_{EN}			200		kΩ
Bootstrap Diode						
Bootstrap diode VF @ 100uA	V_{F1}			0.55		V
Bootstrap diode VF @ 100mA	V_{F2}			1		V
Bootstrap diode dynamic R	R_D	@ 100mA		2.7		Ω
Low Side Gate Driver						
Low level output voltage	V_{OLL}	I_O=100mA		0.15	0.22	V
High level output voltage to rail	V_{OHL}	I_O=-100mA		0.45	0.6	V
Peak pull-up current(7)	I_{OHL}	V_{DRVL}=0V, V_{DD}=4.5V (8)		0.15		A
		V_{DRVL}=0V, V_{DD}=12V		1.5		A
		V_{DRVL}=0V, V_{DD}=16V		2.5		A
Peak pull-down current(7)	I_{OLL}	V_{DRVL}=V_{DD}=4.5V (8)		0.25		A
		V_{DRVL}=V_{DD}=12V		2.5		A
		V_{DRVL}=V_{DD}=16V		3.5		A
Floating Gate Driver						
Low level output voltage	V_{OLH}	I_O=100mA		0.15	0.22	V

MPS Proprietary Information. Patent Protected. Unauthorized Photocopy and Duplication Prohibited.
© 2014 MPS. All Rights Reserved.

ELECTRICAL CHARACTERISTICS *(continued)*

V_{DD} = V_{BST}-V_{SW}=12V, V_{SS}=V_{SW} = 0V, V_{EN}=3.3V, No load at DRVH and DRVL, T_A= +25°C, unless otherwise noted.

Parameter	Symbol	Condition	Min	Typ	Max	Units
High level output voltage to rail	V_{OHH}	I_O=-100mA		0.45	0.6	V
Peak pull-up current(7)	I_{OHH}	V_{DRVH}=0V , V_{BST} - V_{SW} =5V (9)		0.25		A
		V_{DRVH}=0V, V_{DD}=12V		1.5		A
		V_{DRVH}=0V, V_{DD}=16V		2.5		A
Peak pull-down current(7)	I_{OLH}	V_{DRVH}=V_{BST} - V_{SW} =5V (9)		0.65		A
		V_{DRVH}=V_{DD}=12V		2.5		A
		V_{DRVH}=V_{DD}=16V		3.5		A
Switching Spec. --- Low Side Gate Driver						
Turn-off propagation delay INL falling to DRVL falling	T_{DLFF}			20		ns
Turn-on propagation delay INL rising to DRVL rising	T_{DLRR}			20		ns
DRVL rise time		C_L=1nF		12		ns
DRVL fall time		C_L=1nF		9		ns
Switching Spec. --- Floating Gate Driver						
Turn-off propagation delay INL falling to DRVH falling	T_{DHFF}			20		ns
Turn-on propagation delay INL rising to DRVH rising	T_{DHRR}			18		ns
DRVH rise time		C_L=1nF		12		ns
DRVH fall time		C_L=1nF		9		ns
Switching Spec. --- Matching						
Floating driver turn-off to low side drive turn-on	T_{MON}			1	5	ns
Low side driver turn-off to floating driver turn-on	T_{MOFF}			1	5	ns
Minimum input pulse width that changes the output	T_{PW}				50(7)	ns
Bootstrap diode turn-on or turn-off time	T_{BS}			10(7)		ns

Note:

6) Based on characterization data. Not production tested.
7) Guaranteed by design.
8) After startup VDD fall to 4.5V
9) After startup VBST- VSW fall to 5V

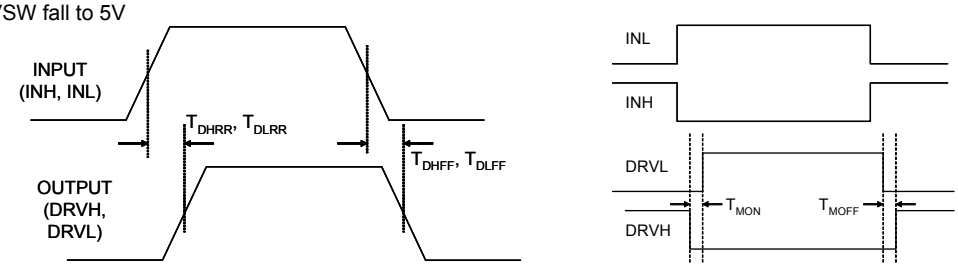

Figure 1—Timing Diagram

MPS Proprietary Information. Patent Protected. Unauthorized Photocopy and Duplication Prohibited.
© 2014 MPS. All Rights Reserved.

PIN FUNCTIONS

Package Pin #	Name	Description
1	VDD	Supply input. This pin supplies power to all the internal circuitry. A decoupling capacitor to ground must be placed close to this pin to ensure stable and clean supply.
2	NC	No Connection.
3	BST	Bootstrap. This is the positive power supply for the internal floating high-side MOSFET driver. Connect a bypass capacitor between this pin and SW pin.
4	DRVH	Floating driver output.
5	SW	Switching node.
6	EN	On/off Control.
7	INH	Control signal input for the floating driver.
8	INL	Control signal input for the low side driver.
9	VSS, Exposed Pad	Chip ground. Connect to Exposed pad to VSS for proper thermal operation.
10	DRVL	Low side driver output.

MPS Proprietary Information. Patent Protected. Unauthorized Photocopy and Duplication Prohibited.
© 2014 MPS. All Rights Reserved.

TYPICAL PERFORMANCE CHARACTERISTICS

V_{DD} =12V, V_{SS}=V_{SW} = 0V, T_A= +25°C, unless otherwise noted.

I_{DDO} Operation Current vs. Frequency

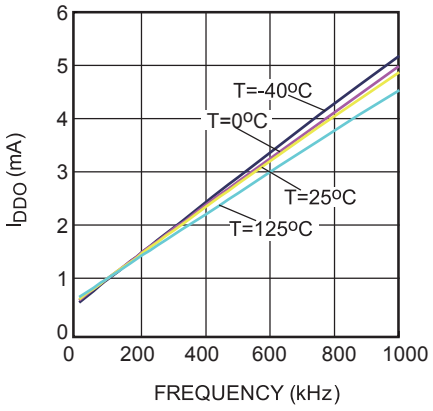

I_{BSTO} Operation Current vs. Frequency

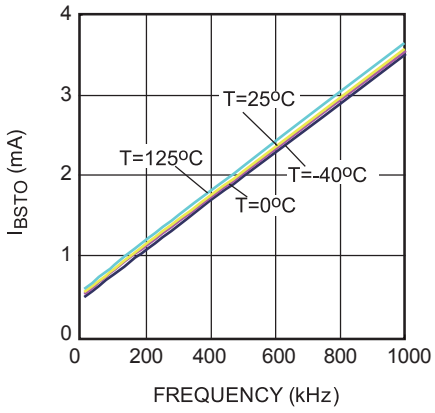

High Level Output Voltage vs.Temperature

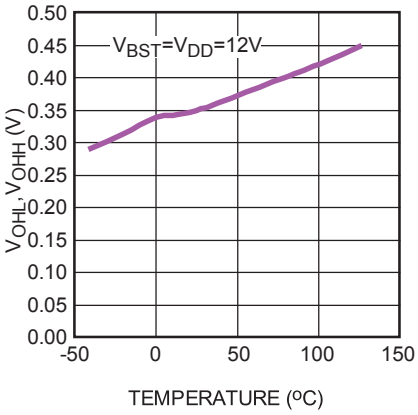

Low Level Output Voltage vs. Temperature

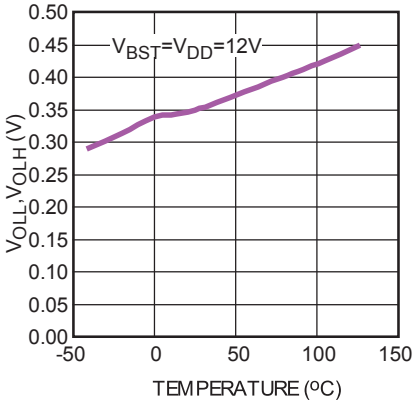

Undervoltage Lockout Threshold vs.Temperature

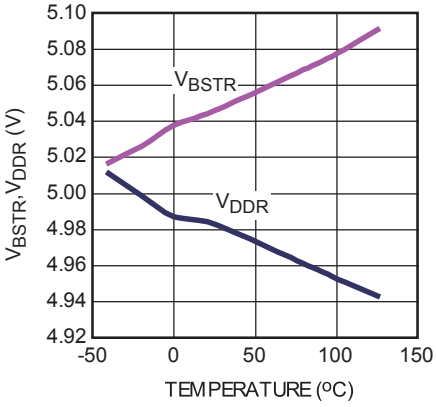

Undervoltage Lockout Hysteresis vs.Temperature

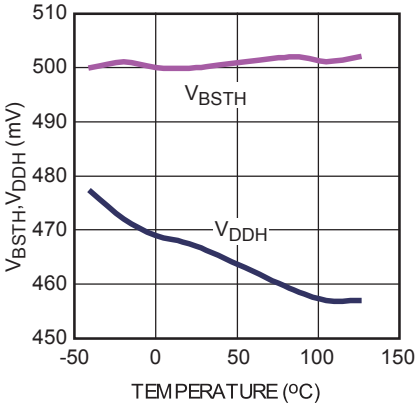

Propagation Delay vs. Temperature

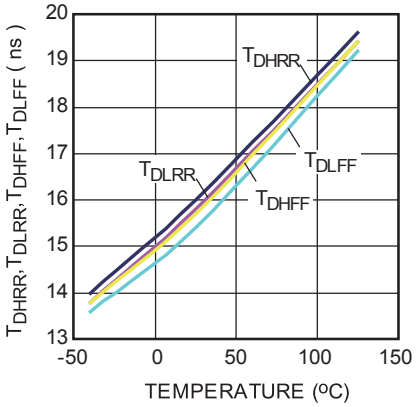

Bootstrap Diode I-V Characteristics

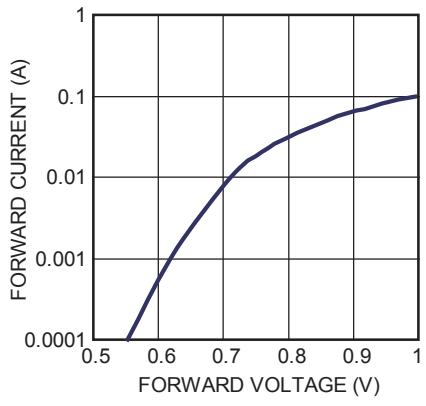

Quiescent Current vs. Voltage

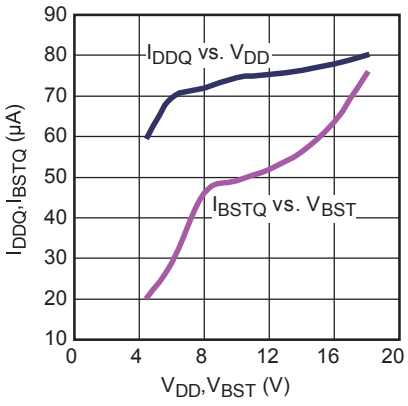

MPS Proprietary Information. Patent Protected. Unauthorized Photocopy and Duplication Prohibited.
© 2014 MPS. All Rights Reserved.

TYPICAL PERFORMANCE CHARACTERISTICS *(continued)*

V_{DD} =12V, V_{SS}=V_{SW} = 0V, T_A= +25°C, unless otherwise noted.

Peak Current vs. V_{DD} Voltage

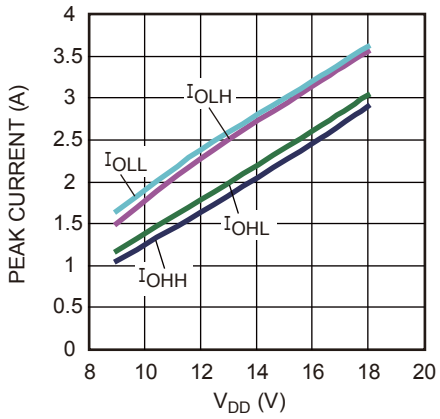

MPS Proprietary Information. Patent Protected. Unauthorized Photocopy and Duplication Prohibited.
© 2014 MPS. All Rights Reserved.

TYPICAL PERFORMANCE CHARACTERISTICS *(continued)*

V_{DD} =12V, V_{SS}=V_{SW} = 0V, T_A= +25°C, unless otherwise noted.

Turn-on Propagation Delay

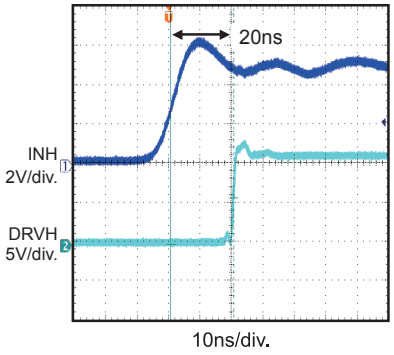

Turn-on Propagation Delay

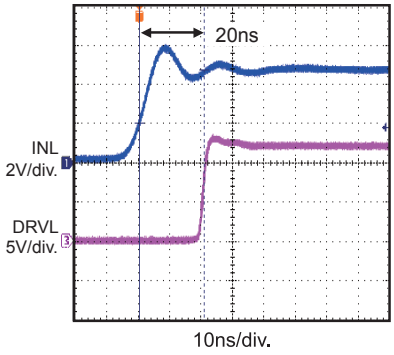

Turn-off Protection Delay

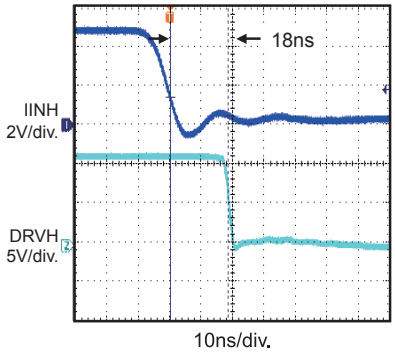

Turn-off Protection Delay

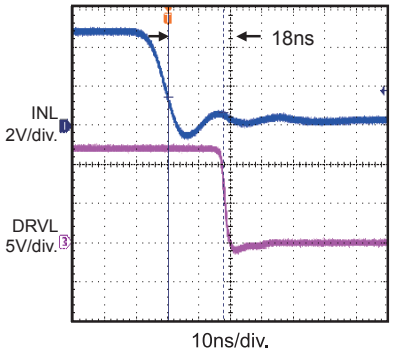

Drive Rise Time (1nF Load)

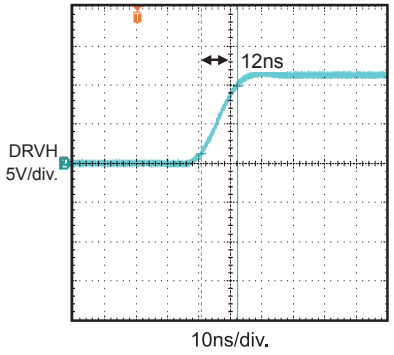

Drive Rise Time (1nF Load)

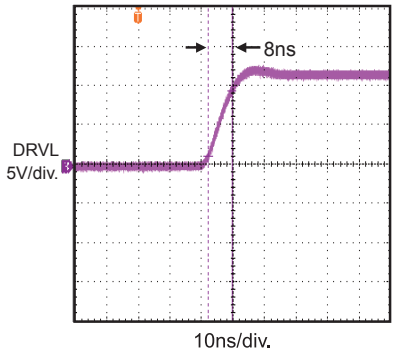

Drive Fall Time (1nF Load)

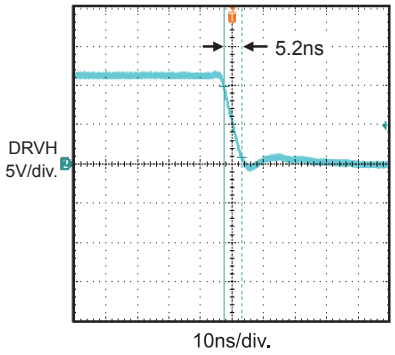

Drive Fall Time (1nF Load)

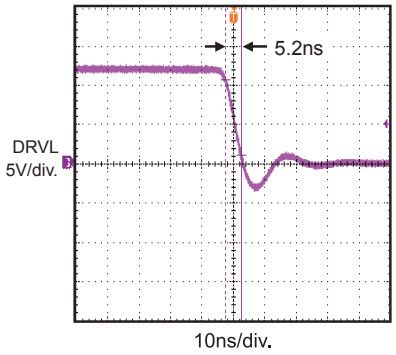

Input Signal Overlap Protection

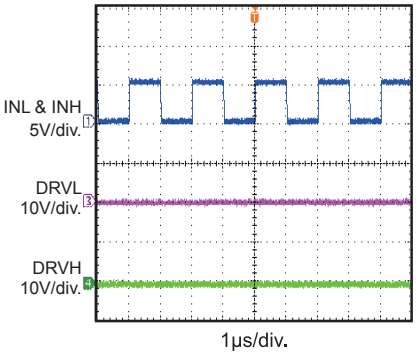

MPS Proprietary Information. Patent Protected. Unauthorized Photocopy and Duplication Prohibited.
© 2014 MPS. All Rights Reserved.

TYPICAL PERFORMANCE CHARACTERISTICS *(continued)*

V_{DD} =5V, after startup V_{DD} falls to 5V, V_{SS}=V_{SW} = 0V, T_A= +25°C, unless otherwise noted.

I_{DDO} Operation Current vs. Frequency

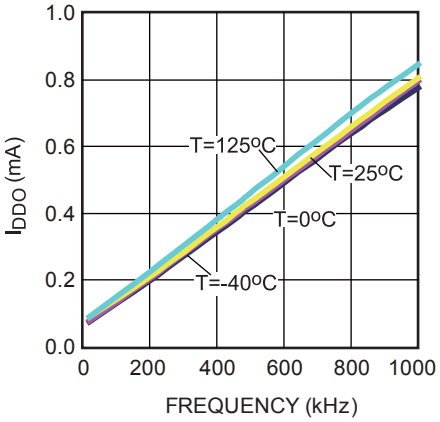

I_{BSTO} Operation Current vs. Frequency

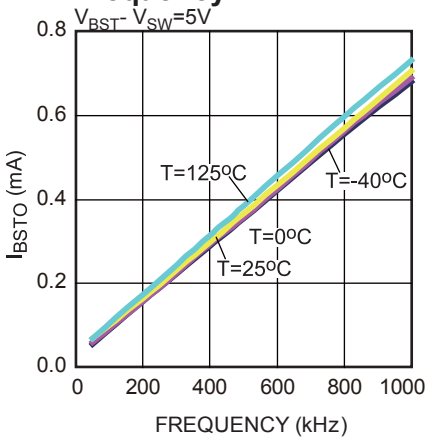

High Level Output Voltage vs.Temperature

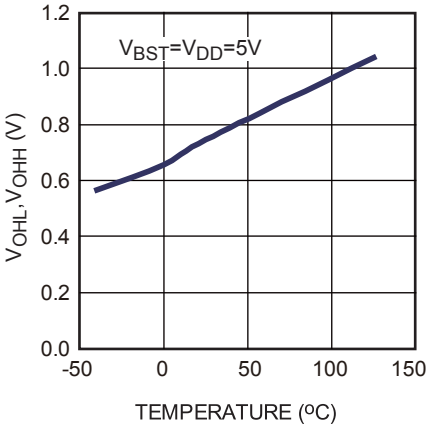

Low Level Output Voltage vs. Temperature

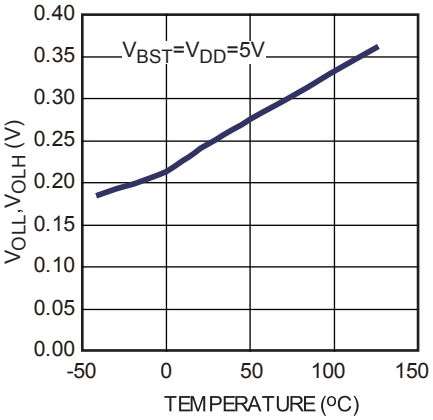

Propagation Delay vs. Temperature

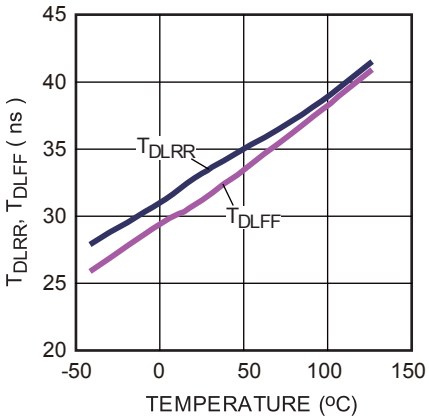

MPS Proprietary Information. Patent Protected. Unauthorized Photocopy and Duplication Prohibited.
© 2014 MPS. All Rights Reserved.

TYPICAL PERFORMANCE CHARACTERISTICS *(continued)*

V_{DD} =5V, after startup V_{DD} falls to 5V, V_{SS}=V_{SW} = 0V, T_A= +25°C, unless otherwise noted.

Turn-on Propagation Delay

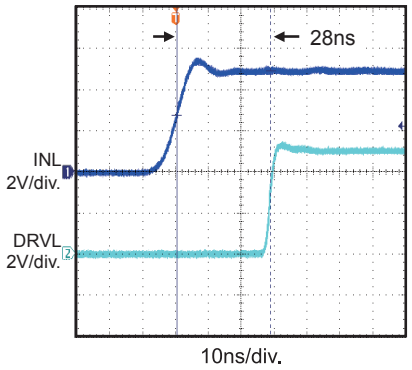

Turn-off Propagation Delay

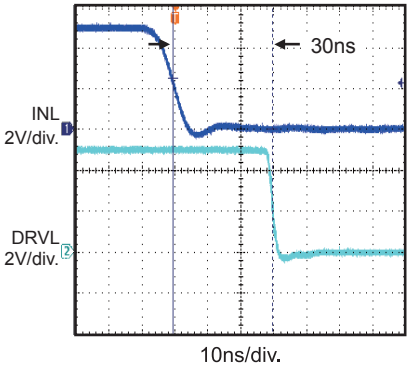

Drive Rise Time (1nF Load)

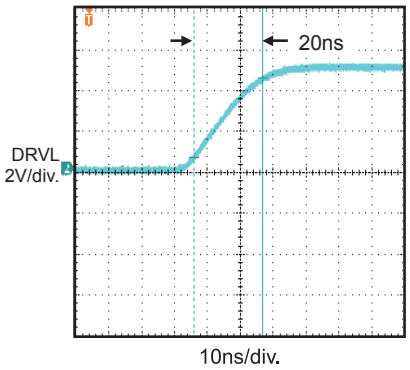

Drive Fall Time (1nF Load)

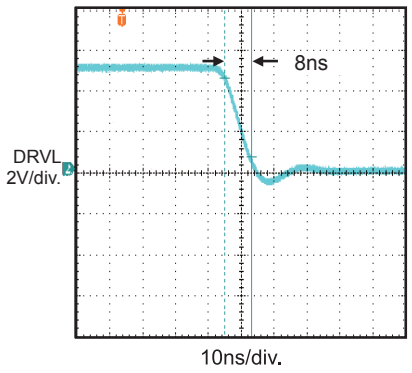

MPS Proprietary Information. Patent Protected. Unauthorized Photocopy and Duplication Prohibited.
© 2014 MPS. All Rights Reserved.

BLOCK DIAGRAM

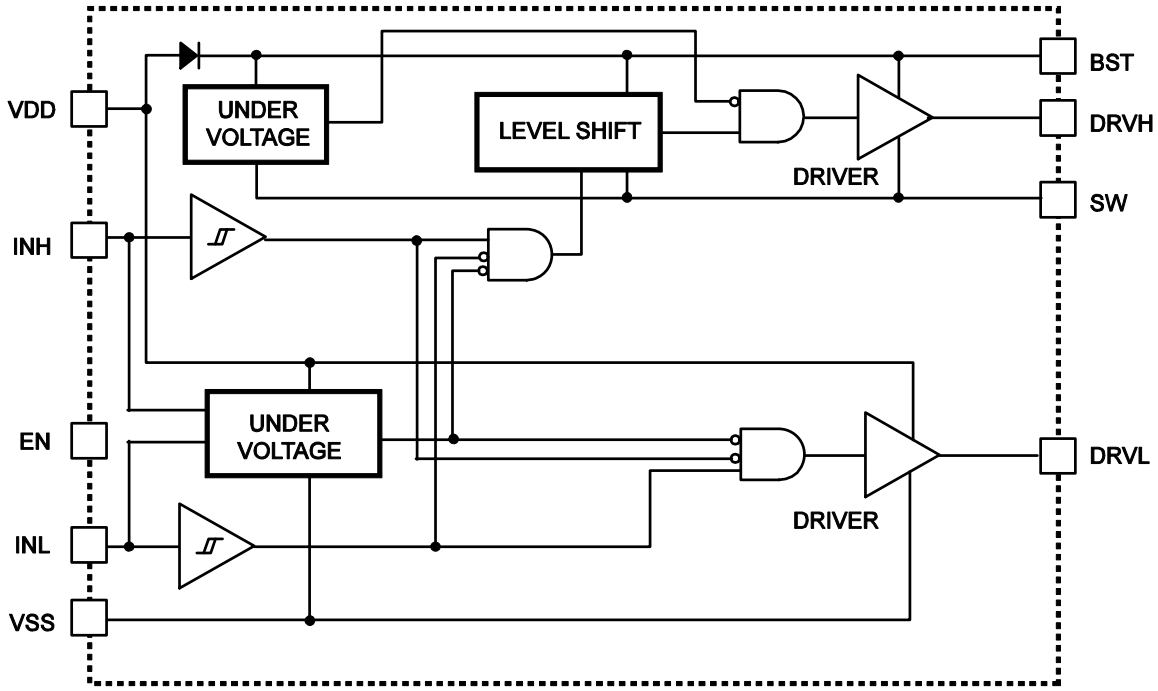

Figure 2—Function Block Diagram

MPS Proprietary Information. Patent Protected. Unauthorized Photocopy and Duplication Prohibited.
© 2014 MPS. All Rights Reserved.

OPERATION

Switch Shoot-through Protection

The input signals of INH and INL are controlled independently. Input shoot-through protection circuitry is implemented to prevent shoot-through between the HSFET and LSFET outputs. Only one of the FET drivers can be ON at one time. If both INH and INL are high at the same time, both HSFET and LSFET will be OFF.

Under Voltage Lock Out

When VDD or BST goes below their respective UVLO thresholds, both DRVH and DRVL outputs will go low to turn off both FETs. Once VDD rises above the UVLO threshold, both DRVH and DRVL will stay low until a rising edge is detected on either INH or INL.

The truth table in Table 1 details the operation of the HSFET and LSFET under different INH, INL and UVLO conditions

Table1 States of Driver Output under different conditions

EN	BST-SW Voltage	V_{DD} Voltage	INH	INL	DRVH	DRVL	UVLO Latch status	Operating Condition
0	X	X	X	X	Open	200kΩ pull down	X	X
1	X	X	0	0	0	0	X	Normal Operation
	X	X	1	1	0	0	X	
	X	Above UVLO	0	1	0	1	Normal	
	Above UVLO	Above UVLO	1	0	1	0	Normal	
	Falls below UVLO	Above UVLO	X	X	0	0	Normal to Tripped	Normal-to-Tripped Transition
	Above UVLO	Falls below UVLO	X	X	0	0	Normal to Tripped	
	X	Above UVLO	0 or 1	0 or 1	0	0	Tripped	When UVLO latch is tripped.
	X	Below UVLO	X	X	0	0	Tripped	
	X	Above UVLO	0 to 1	0 to 1	0	0	Tripped, Reset by INL & INH	Tripped to Normal Transition
	X	Above UVLO	1 to 0	1	0	0 to 1	Tripped, Reset by INH Falling	
	Below UVLO	Above UVLO	1	1 to 0	0	0	Tripped, Reset by INL Falling	
	Above UVLO	Above UVLO	1	1 to 0	0 to 1	0	Tripped, Reset by INL Falling	
	Below UVLO	Above UVLO	0	0 to 1	0	0 to 1	Tripped, Reset by INL	
	Below UVLO	Above UVLO	0 to 1	0	0	0	Tripped, Reset by INH	
	Above UVLO	Above UVLO	0 to 1	0	0 to 1	0	Tripped, Reset by INH	

Note: x = Don't Care.

.

MPS Proprietary Information. Patent Protected. Unauthorized Photocopy and Duplication Prohibited.
© 2014 MPS. All Rights Reserved.

APPLICATION INFORMATION

Reference Design Circuits

Half Bridge Motor Driver

T In half-bridge converter topology, the MOSFETs are driven alternately with some dead time. Therefore, INH and INL are driven with alternating signals from the PWM controller. The input voltage can be up to 100V in this application.

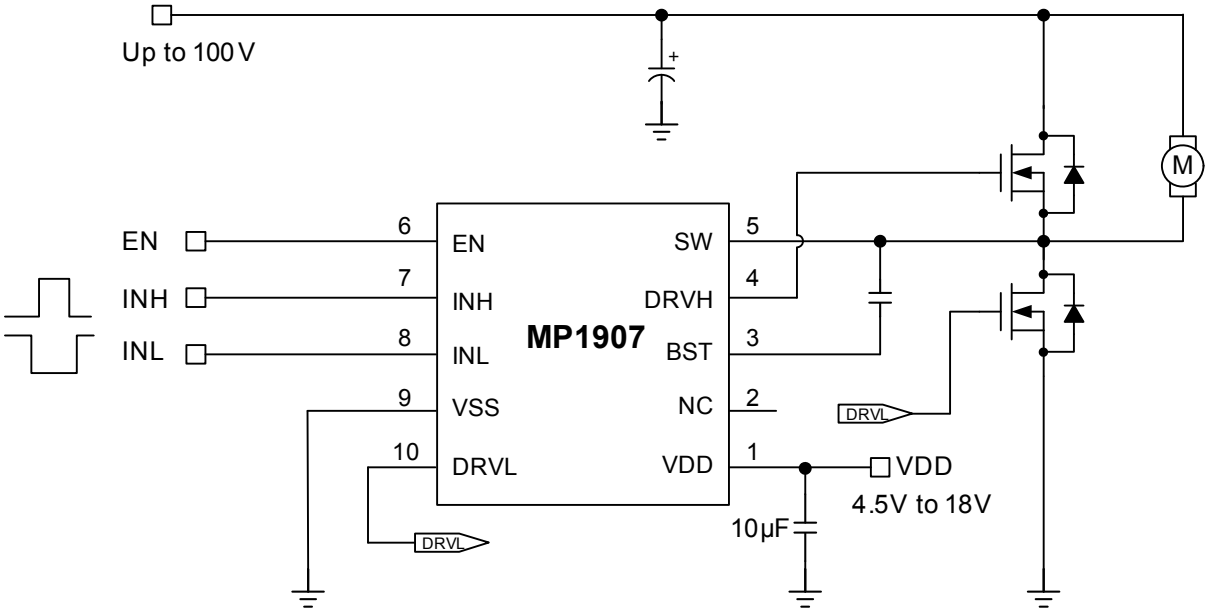

Figure 3—Half-Bridge Motor Driver

MPS Proprietary Information. Patent Protected. Unauthorized Photocopy and Duplication Prohibited.
© 2014 MPS. All Rights Reserved.

Active-Clamp Forward Converter

In active-clamp forward converter topology, the MOSFETs are driven alternately. The high-side MOSFET, along with capacitor C_{reset}, is used to reset the power transformer in a lossless manner. This topology lends itself well to run at duty cycles exceeding 50%. For these reasons, the input voltage may not be able to run at 100V for this application.

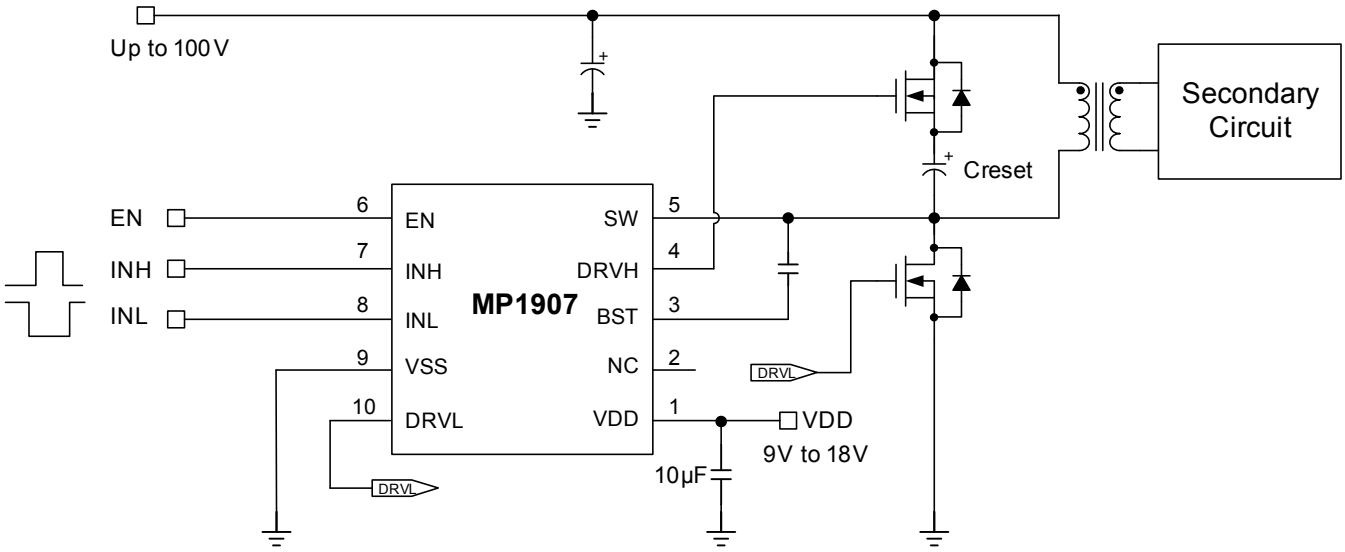

Figure 4—Active-clamp Forward Converter

MPS Proprietary Information. Patent Protected. Unauthorized Photocopy and Duplication Prohibited.
© 2014 MPS. All Rights Reserved.

PACKAGE INFORMATION

QFN10 (3 ×3 mm)

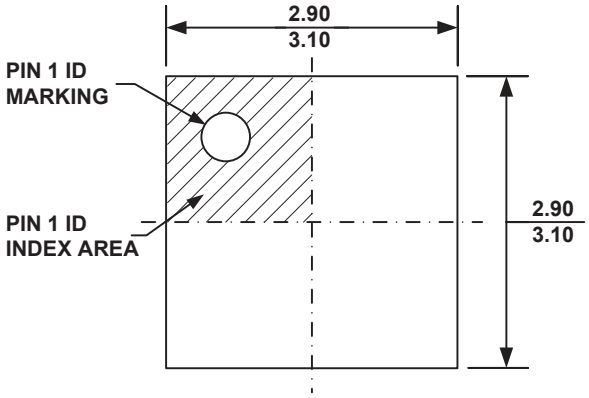

TOP VIEW

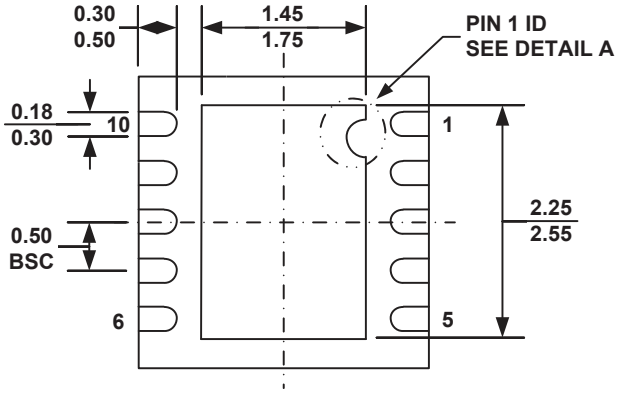

BOTTOM VIEW

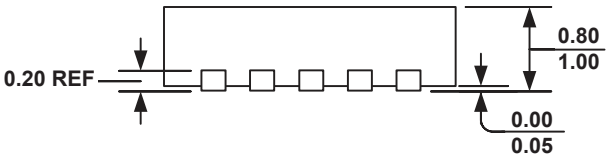

SIDE VIEW

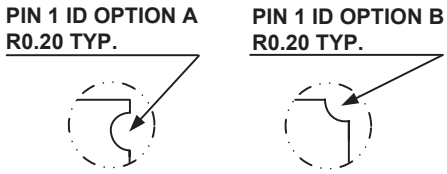

DETAIL A

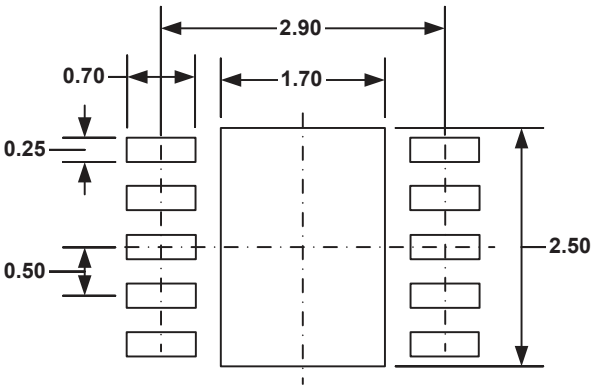

RECOMMENDED LAND PATTERN

NOTE:

1) ALL DIMENSIONS ARE IN MILLIMETERS.
2) EXPOSED PADDLE SIZE DOES NOT INCLUDE MOLD FLASH.
3) LEAD COPLANARITY SHALL BE 0.10 MILLIMETER MAX.
4) DRAWING CONFORMS TO JEDEC MO-229, VARIATION VEED-5.
5) DRAWING IS NOT TO SCALE.

NOTICE: The information in this document is subject to change without notice. Please contact MPS for current specifications. Users should warrant and guarantee that third party Intellectual Property rights are not infringed upon when integrating MPS products into any application. MPS will not assume any legal responsibility for any said applications.

MPS Proprietary Information. Patent Protected. Unauthorized Photocopy and Duplication Prohibited.
© 2014 MPS. All Rights Reserved.