具有 ±15kV IEC ESD 保护功能的 MAX3232E 3V 至 5.5V 多通道 RS-232 线路驱动器和接收器

1 特性

- 为 RS-232 总线引脚提供 ESD 保护
  - ±15kV (HBM)
  - ±8kV（IEC61000-4-2，接触放电）
  - ±15kV（IEC61000-4-2，空气间隙放电）
- 符合或超出 TIA/EIA-232-F 和 ITU V.28 标准的要求
- 由 3V 至 5.5V V_{CC} 电源供电
- 速率高达 250kbit/s
- 两个驱动器和两个接收器
- 低电源电流：300 µA（典型值）
- 外部电容器：4 × 0.1 µF
- 接受 5V 逻辑输入及 3.3V 电源
- 引脚与备选高速器件兼容 (1Mbit/s)
  - SN65C3232E（–40°C 至 +85°C）
  - SN75C3232E（0°C 至 70°C）

2 应用

- 工业 PC
- 有线网络
- 数据中心和企业级计算
- 电池供电型系统
- 笔记本电脑
- 掌上电脑
- 手持设备

3 说明

MAX3232E 器件由两个线路驱动器、两个线路接收器和一个双路电荷泵电路组成，具有引脚对引脚（串行端口连接引脚，包括 GND）±15kV IEC ESD 保护。

该器件符合 TIA/EIA-232-F 的要求，并在异步通信控制器与串行端口连接器之间提供电气接口。电荷泵和四个小型外部电容器支持由 3V 至 5.5V 单电源供电。该器件以高达 250kbit/s 的数据信号传输速率运行，驱动器输出压摆率最高为 30V/µs。

器件信息(1)

器件型号	封装	封装尺寸（标称值）
MAX3232E	SOIC (D) (16)	9.90mm × 3.91mm
	SSOP (DB) (16)	6.20mm × 5.30mm
	SOIC (DW) (16)	10.30mm × 7.50mm
	TSSOP (PW) (16)	5.00mm × 4.40mm

(1) 如需了解所有可用封装，请参阅数据表末尾的可订购产品附录。

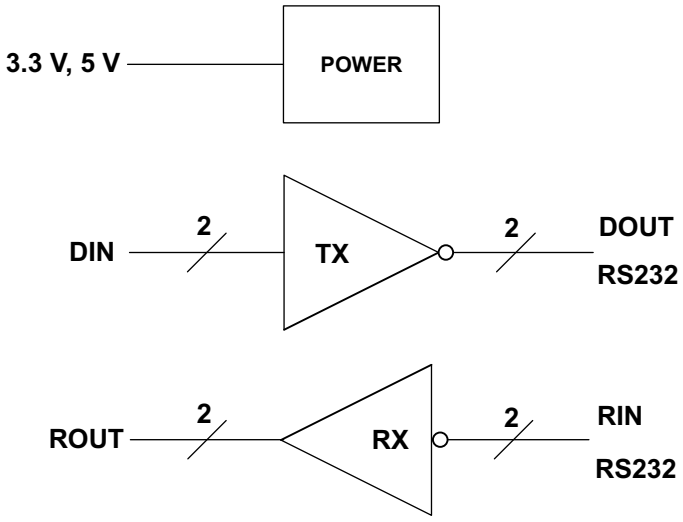

简化图

本文档旨在为方便起见，提供有关 TI 产品中文版本的信息，以确认产品的概要。有关适用的官方英文版本的最新信息，请访问 www.ti.com，其内容始终优先。TI 不保证翻译的准确性和有效性。在实际设计之前，请务必参考最新版本的英文版本。

Table of Contents

1 特性 1
2 应用 1
3 说明 1
4 Revision History 2
5 Pin Configuration and Functions 3
6 Specifications 4
6.1 Absolute Maximum Ratings 4
6.2 ESD Ratings 4
6.3 ESD Ratings - IEC Specifications 4
6.4 Recommended Operating Conditions(1) 4
6.5 Thermal Information 5
6.6 Electrical Characteristics — Device(1) 5
6.7 Electrical Characteristics — Driver(1) 5
6.8 Electrical Characteristics — Receiver(2) 6
6.9 Switching Characteristics(1) 6
6.10 Typical Characteristics 7
7 Parameter Measurement Information 8
8 Detailed Description 9
8.1 Overview 9
8.2 Functional Block Diagram 9
8.3 Feature Description 9
8.4 Device Functional Modes 10
9 Application and Implementation 11
9.1 Application Information 11
9.2 Typical Application 11
10 Power Supply Recommendations 12
11 Layout 13
11.1 Layout Guidelines 13
11.2 Layout Example 13
12 Device and Documentation Support 14
12.1 接收文档更新通知 14
12.2 支持资源 14
12.3 Trademarks 14
12.4 静电放电警告 14
12.5 术语表 14

4 Revision History

注：以前版本的页码可能与当前版本的页码不同

Changes from Revision D (May 2017) to Revision E (June 2021) **Page**

- 添加了*应用*工业 PC、有线网络、数据中心和企业级计算 1
- Added the *ESD Ratings - IEC Specifications* table. Added a table note about 1-uF capacitor requirement between V_{CC} and GND for D, DB and PW packages 4
- Changed the thermal parameter values for D, DB and PW packages in the *Thermal Information* table 5

Changes from Revision C (June 2015) to Revision D (May 2017) **Page**

- Changed 3 V ± 5.5 V to 3 V to 5.5 V in the V_{CC} column of 表 9-1 11

Changes from Revision B (December 2013) to Revision C (May 2015) **Page**

- 添加了*器件信息* 表、*引脚配置和功能* 部分、*ESD 等级* 表、*特性说明* 部分、*器件功能模式*、*应用和实施* 部分、*电源相关建议* 部分、*布局* 部分、*器件和文档支持* 部分以及*机械、封装和可订购信息* 部分 1

Changes from Revision A (April 2007) to Revision B (December 2013) **Page**

- 将文档更新为新的 TI 数据表格式 1
- 删除了*订购信息* 表 1
- Added *Thermal Information* table 5

Copyright © 2021 Texas Instruments Incorporated

5 Pin Configuration and Functions

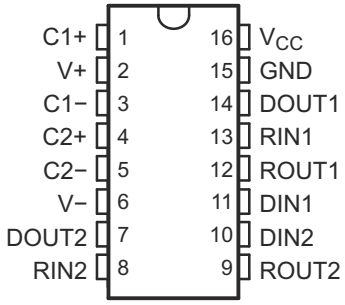

图 5-1. D, DW, DB and PW Package, 16-Pin SOIC, SSOP and TSSOP, Top View

表 5-1. Pin Functions

PIN		I/O	DESCRIPTION
NAME	NO.		
C1+	1	—	Positive lead of C1 capacitor
V+	2	O	Positive charge pump output for storage capacitor only
C1 –	3	—	Negative lead of C1 capacitor
C2+	4	—	Positive lead of C2 capacitor
C2 –	5	—	Negative lead of C2 capacitor
V –	6	O	Negative charge pump output for storage capacitor only
DOUT2	7	O	RS232 line data output (to remote RS232 system)
RIN2	8	I	RS232 line data input (from remote RS232 system)
ROUT2	9	O	Logic data output (to UART)
DIN2	10	I	Logic data input (from UART)
DIN1	11	I	Logic data input (from UART)
ROUT1	12	O	Logic data output (to UART)
RIN1	13	I	RS232 line data input (from remote RS232 system)
DOUT1	14	O	RS232 line data output (to remote RS232 system)
GND	15	—	Ground
V_{CC}	16	—	Supply Voltage, Connect to external 3-V to 5.5-V power supply

Copyright © 2021 Texas Instruments Incorporated

6 Specifications

6.1 Absolute Maximum Ratings

over operating free-air temperature range (unless otherwise noted)(1)

			MIN	MAX	UNIT
V_{CC}	Supply voltage(2)		–0.3	6	V
V+	Positive output supply voltage(2)		–0.3	7	V
V–	Negative output supply voltage(2)		0.3	–7	V
V+ – V–	Supply voltage difference(2)			13	V
V_I	Input voltage	Drivers	–0.3	6	V
		Receivers	–25	25	V
V_O	Output voltage	Drivers	–13.2	13.2	V
		Receivers	–0.3	V_{CC} + 0.3	V
T_J	Operating virtual junction temperature			150	°C
T_{stg}	Storage temperature		–65	150	°C

(1) Operation outside the *Absolute Maximum Ratings* may cause permanent device damage. *Absolute Maximum Ratings* do not imply functional operation of the device at these or any other conditions beyond those listed under *Recommended Operating Conditions*. If used outside the Recommended Operating Conditions but within the *Absolute Maximum Ratings*, the device may not be fully functional, and this may affect device reliability, functionality, performance, and shorten the device lifetime
(2) All voltages are with respect to network GND.

6.2 ESD Ratings

				VALUE	UNIT
$V_{(ESD)}$	Electrostatic discharge	Human body model (HBM), per ANSI/ESDA/JEDEC JS-001(1)	All pins except RIN and DOUT	±2000	V
			RIN and DOUT Pins	±15,000	
		Charged-device model (CDM), per JEDEC specification JESD22-C101(2)	All pins	±1500	

(1) JEDEC document JEP155 states that 500-V HBM allows safe manufacturing with a standard ESD control process.
(2) JEDEC document JEP157 states that 250-V CDM allows safe manufacturing with a standard ESD control process.

6.3 ESD Ratings - IEC Specifications

				VALUE	UNIT
$V_{(ESD)}$	Electrostatic discharge	IEC61000-4-2, Contact Discharge(1)	RS232 port pins (RIN, DOUT)	±8000	V
		IEC61000-4-2, Air-Gap Discharge(1)	RS232 port pins (RIN, DOUT)	±15,000	

(1) For D, DB and PW packages only: Minimum of 1-µF capacitor is required between V_{CC} and GND to meet the specified IEC 16000-4-2 rating.

6.4 Recommended Operating Conditions(1)

See 图 9-1.

				MIN	NOM	MAX	UNIT
	Supply voltage		V_{CC} = 3.3 V	3	3.3	3.6	V
			V_{CC} = 5 V	4.5	5	5.5	
V_{IH}	Driver high-level input voltage	DIN	V_{CC} = 3.3 V	2		5.5	V
			V_{CC} = 5 V	2.4		5.5	
V_{IL}	Driver low-level input voltage	DIN		0		0.8	V
V_I	Receiver input voltage	RIN		–25		25	V

Copyright © 2021 Texas Instruments Incorporated

6.4 Recommended Operating Conditions(1) (continued)

See 图 9-1.

			MIN	NOM	MAX	UNIT
T_A	Operating free-air temperature	MAX3232EC	0		70	°C
		MAX3232EI	–40		85	

(1) Test conditions are C1 – C4 = 0.1 μF at V_{CC} = 3.3 V ± 0.3 V; C1 = 0.047 μF, C2 – C4 = 0.33 μF at V_{CC} = 5 V ± 0.5 V.

6.5 Thermal Information

THERMAL METRIC(1)		MAX3232E				UNIT
		PW (TSSOP)	D (SOIC)	DW (SOIC)	DB (SSOP)	
		16 PINS	16 PINS	16 PINS	16 PINS	
$R_{\theta JA}$	Junction-to-ambient thermal resistance	108.2	85.9	72.3	103.1	°C/W
$R_{\theta JCtop}$	Junction-to-case (top) thermal resistance	39.0	43.1	33.5	49.2	°C/W
$R_{\theta JB}$	Junction-to-board thermal resistance	54.4	44.5	37.1	54.8	°C/W
ψ_{JT}	Junction-to-top characterization parameter	3.3	10.1	7.5	12	°C/W
ψ_{JB}	Junction-to-board characterization parameter	53.8	44.1	37.1	54.1	°C/W
$R_{\theta JCbot}$	Junction-to-case (bottom) thermal resistance	N/A	N/A	N/A	N/A	°C/W

(1) For more information about traditional and new thermal metrics, see the *Semiconductor and IC Package Thermal Metrics* application report.

6.6 Electrical Characteristics — Device(1)

over recommended ranges of supply voltage and operating free-air temperature (unless otherwise noted) (see 图 9-1).

PARAMETER		TEST CONDITIONS	MIN	TYP(2)	MAX	UNIT
I_{CC}	Supply current	No load, V_{CC} = 3.3 V or 5 V		0.3	1	mA

(1) Test conditions are C1 – C4 = 0.1 μF at V_{CC} = 3.3 V ± 0.3 V; C1 = 0.047 μF, C2 – C4 = 0.33 μF at V_{CC} = 5 V ± 0.5 V.
(2) All typical values are at V_{CC} = 3.3 V or V_{CC} = 5 V, and T_A = 25°C.

6.7 Electrical Characteristics — Driver(1)

over operating free-air temperature range (unless otherwise noted) (see 图 9-1).

PARAMETER		TEST CONDITIONS		MIN	TYP(2)	MAX	UNIT
V_{OH}	High-level output voltage	DOUT at R_L = 3 kΩ to GND,	DIN = GND	5	5.4		V
V_{OL}	Low-level output voltage	DOUT at R_L = 3 kΩ to GND,	DIN = V_{CC}	–5	–5.4		V
I_{IH}	High-level input current	V_I = V_{CC}			±0.01	±1	μA
I_{IL}	Low-level input current	V_I at GND			±0.01	±1	μA
I_{OS} (3)	Short-circuit output current	V_{CC} = 3.6 V,	V_O = 0 V		±35	±60	mA
		V_{CC} = 5.5 V,	V_O = 0 V				
r_O	Output resistance	V_{CC}, V+, and V – = 0 V,	V_O = ±2 V	300	10M		Ω

(1) Test conditions are C1 – C4 = 0.1 μF at V_{CC} = 3.3 V ± 0.3 V; C1 = 0.047 μF, C2 – C4 = 0.33 μF at V_{CC} = 5 V ± 0.5 V.
(2) Short-circuit durations should be controlled to prevent exceeding the device absolute power dissipation ratings, and not more than one output should be shorted at a time.
(3) All typical values are at V_{CC} = 3.3 V or V_{CC} = 5 V, and T_A = 25°C.

Copyright © 2021 Texas Instruments Incorporated

6.8 Electrical Characteristics — Receiver(2)

over recommended ranges of supply voltage and operating free-air temperature (unless otherwise noted) (see 图 9-1).

PARAMETER		TEST CONDITIONS	MIN	TYP(1)	MAX	UNIT
V_{OH}	High-level output voltage	I_{OH} = – 1 mA	V_{CC} – 0.6	V_{CC} – 0.1		V
V_{OL}	Low-level output voltage	I_{OL} = 1.6 mA			0.4	V
V_{IT+}	Positive-going input threshold voltage	V_{CC} = 3.3 V		1.5	2.4	V
		V_{CC} = 5 V		1.8	2.4	
V_{IT-}	Negative-going input threshold voltage	V_{CC} = 3.3 V	0.6	1.2		V
		V_{CC} = 5 V	0.8	1.5		
V_{hys}	Input hysteresis (V_{IT+} – V_{IT-})			0.3		V
r_i	Input resistance	V_I = ±3 V to ±25 V	3	5	7	kΩ

(1) All typical values are at V_{CC} = 3.3 V or V_{CC} = 5 V, and T_A = 25°C.
(2) Test conditions are C1 – C4 = 0.1 μF at V_{CC} = 3.3 V ± 0.3 V; C1 = 0.047 μF, C2 – C4 = 0.33 μF at V_{CC} = 5 V ± 0.5 V.

6.9 Switching Characteristics(1)

over recommended ranges of supply voltage and operating free-air temperature (unless otherwise noted) (see 图 9-1)

PARAMETER		TEST CONDITIONS		MIN	TYP(2)	MAX	UNIT
	Maximum data rate	R_L = 3 kΩ, One DOUT switching,	C_L = 1000 pF, see 图 7-1	150	250		kbit/s
$t_{sk(p)}$	Driver pulse skew(3)	R_L = 3 kΩ to 7 kΩ, see 图 7-2	C_L = 150 pF to 2500 pF,		300		ns
SR(tr)	Driver slew rate, transition region (see 图 7-1)	R_L = 3 kΩ to 7 kΩ, V_{CC} = 3.3 V	C_L = 150 pF to 1000 pF	6		30	V/μs
			C_L = 150 pF to 2500 pF	4		30	
t_{PLH}	Receiver propagation delay time, low- to high-level output	C_L = 150 pF, see 图 7-3			300		ns
t_{PHL}	Receiver propagation delay time, high- to low-level output				300		ns
$t_{sk(p)}$	Receiver pulse skew(3)				300		ns

(1) Test conditions are C1 – C4 = 0.1 μF at V_{CC} = 3.3 V ± 0.3 V; C1 = 0.047 μF, C2 – C4 = 0.33 μF at V_{CC} = 5 V ± 0.5 V.
(2) All typical values are at V_{CC} = 3.3 V or V_{CC} = 5 V, and T_A = 25°C.
(3) Pulse skew is defined as $|t_{PLH} - t_{PHL}|$ of each channel of the same device.

Copyright © 2021 Texas Instruments Incorporated

6.10 Typical Characteristics

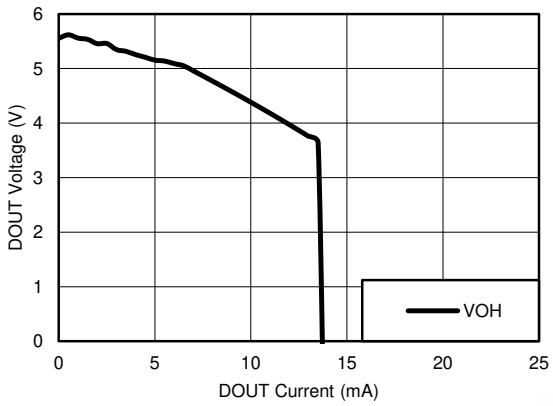

V_{CC} = 3.3 V

图 6-1. DOUT V_{OH} vs Load Current, Both Drivers Loaded

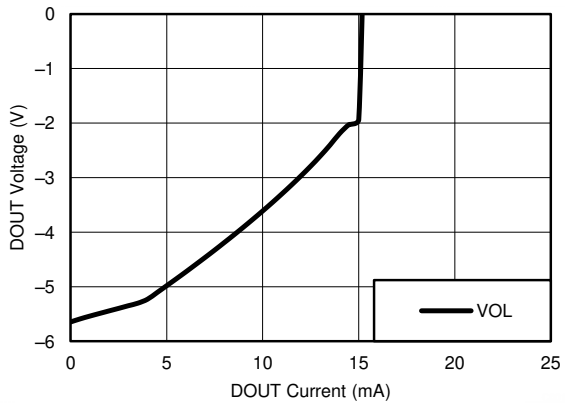

V_{CC} = 3.3 V

图 6-2. DOUT V_{OL} vs Load Current, Both Drivers Loaded

Copyright © 2021 Texas Instruments Incorporated

7 Parameter Measurement Information

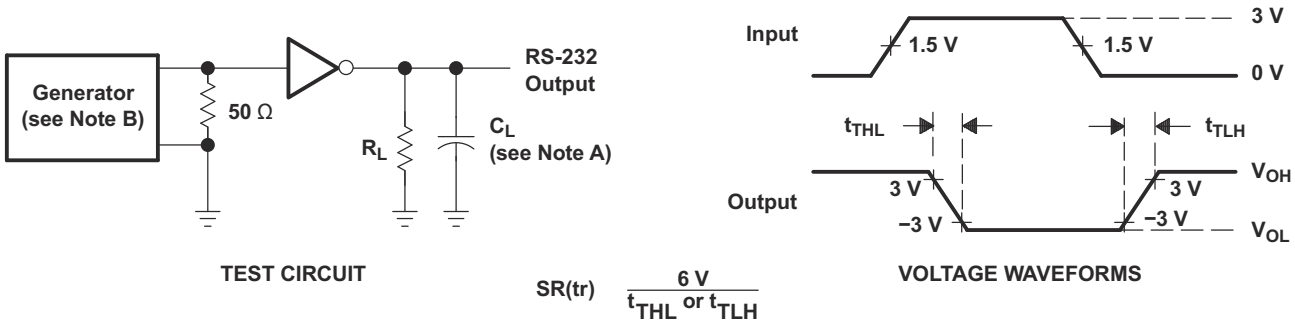

A. C_L includes probe and jig capacitance

B. The pulse generator has the following characteristics: PRR = 250 kbit/s, Z_O = 50 Ω, 50% duty cycle, $t_r \leqslant 10$ ns, $t_f \leqslant 10$ ns

图 7-1. Driver Slew Rate

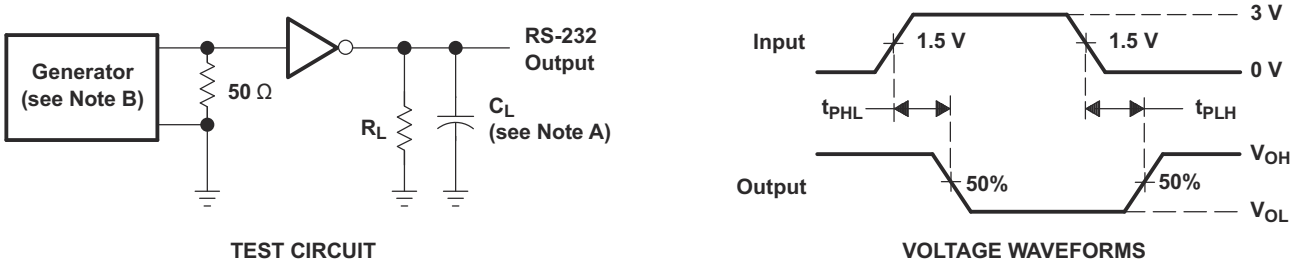

A. C_L includes probe and jig capacitance

B. The pulse generator has the following characteristics: PRR = 250 kbit/s, Z_O = 50 Ω, 50% duty cycle, $t_r \leqslant 10$ ns, $t_f \leqslant 10$ ns

图 7-2. Driver Pulse Skew

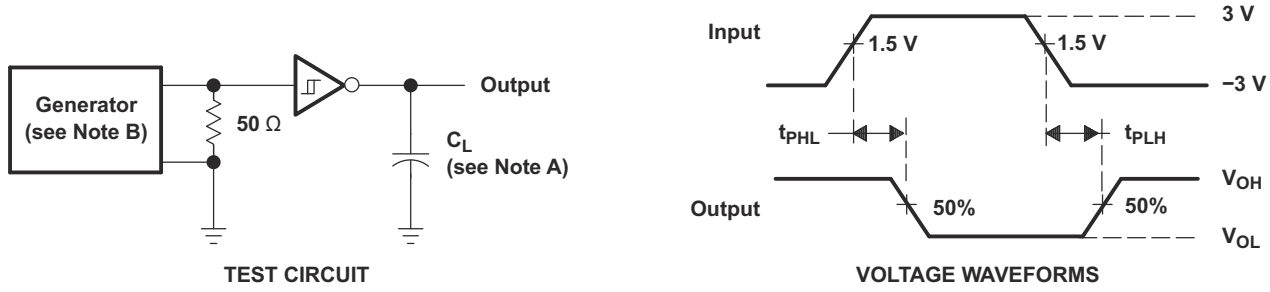

A. C_L includes probe and jig capacitance

B. The pulse generator has the following characteristics: Z_O = 50 Ω, 50% duty cycle, $t_r \leqslant 10$ ns, $t_f \leqslant 10$ ns

图 7-3. Receiver Propagation Delay Times

Copyright © 2021 Texas Instruments Incorporated

8 Detailed Description

8.1 Overview

The MAX3232E device consists of two line drivers, two-line receivers, and a dual charge-pump circuit with IEC61000-4-2 ESD protection terminal to terminal (serial-port connection terminals, including GND). The device meets the requirements of TIA/EIA-232-F and provides the electrical interface between an asynchronous communication controller and the serial-port connector. The charge pump and four small external capacitors allow operation from a single 3-V to 5.5-V supply. The device operates at data signaling rates up to 250 kbit/s and a maximum of 30-V/ μ s driver output slew rate. Outputs are protected against shorts to ground.

8.2 Functional Block Diagram

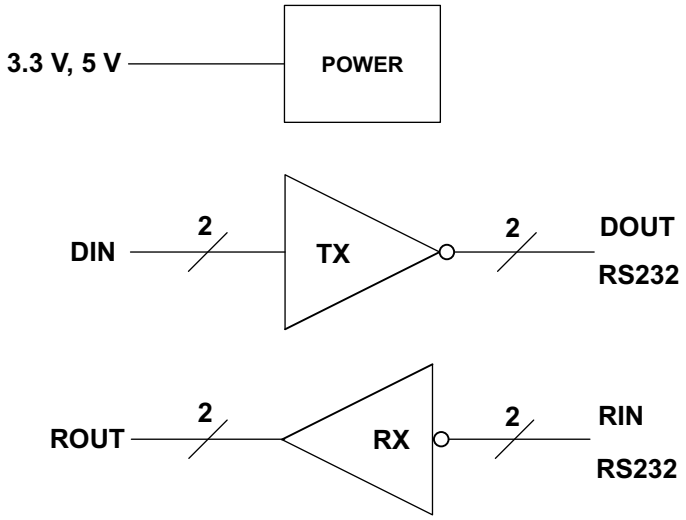

8.3 Feature Description

8.3.1 Power

The power block increases, inverts, and regulates voltage at V+ and V – pins using a charge pump that requires four external capacitors.

8.3.2 RS232 Driver

Two drivers interface standard logic level to RS232 levels. Both DIN inputs must be valid high or low.

8.3.3 RS232 Receiver

Two receivers interface RS232 levels to standard logic levels. An open input will result in a high output on ROUT. Each RIN input includes an internal standard RS232 load.

Copyright © 2021 Texas Instruments Incorporated

8.4 Device Functional Modes

表 8-1 and 表 8-2 list the functional modes of the drivers and receivers of MAX3232E.

表 8-1. Each Driver(1)

INPUT DIN	OUTPUT DOUT
L	H
H	L

(1) H = high level, L = low level

表 8-2. Each Receiver(1)

INPUT RIN	OUTPUT ROUT
L	H
H	L
Open	H

(1) H = high level, L = low level,
Open = input disconnected or connected driver off

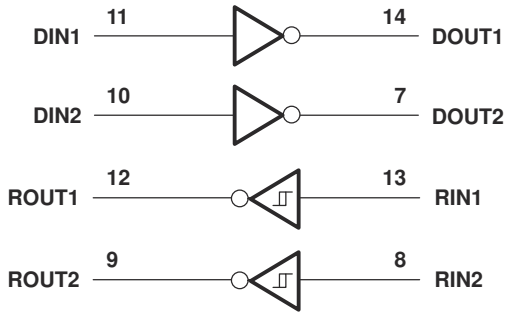

图 8-1. Logic Diagram

8.4.1 V_{CC} Powered by 3 V to 5.5 V

The device is in normal operation.

8.4.2 V_{CC} Unpowered, V_{CC} = 0 V

When MAX3232E is unpowered, it can be safely connected to an active remote RS232 device.

Copyright © 2021 Texas Instruments Incorporated

9 Application and Implementation

Note

Information in the following applications sections is not part of the TI component specification, and TI does not warrant its accuracy or completeness. TI's customers are responsible for determining suitability of components for their purposes, as well as validating and testing their design implementation to confirm system functionality.

9.1 Application Information

For proper operation, add capacitors as shown in 表 9-1.

9.2 Typical Application

ROUT and DIN connect to UART or general-purpose logic lines. RIN and DOUT lines connect to a RS232 connector or cable.

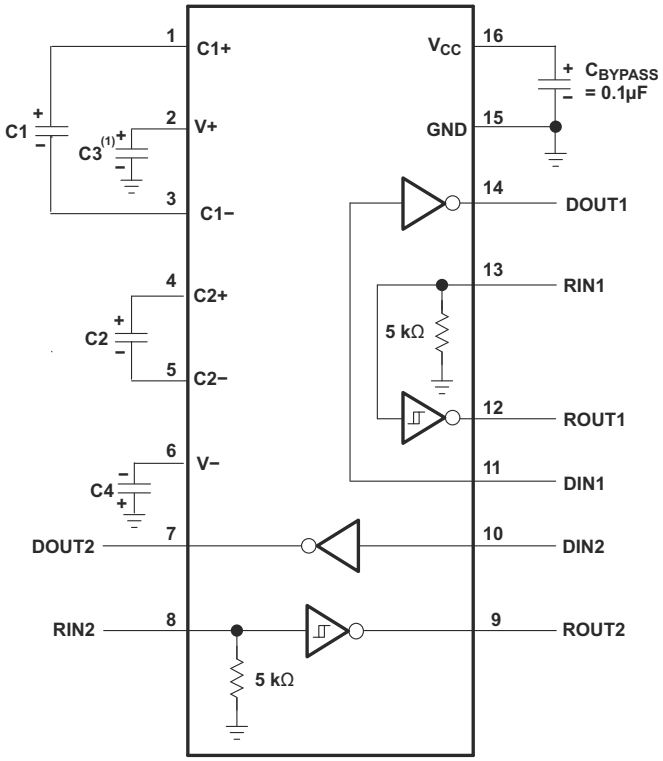

A. C3 can be connected to V_{CC} or GND

A. Resistor values shown are nominal.

B. Nonpolorized ceramic capacitors are acceptable. If polarized tantalum or electrolytic capacitors are used, they should be connected as shown.

图 9-1. Typical Operating Circuit and Capacitor Values

表 9-1. VCC vs Capacitor Values

V_{CC}	C1	C2, C3, C4
3.3 V ± 0.3 V	0.1 µF	0.1 µF
5 V ± 0.5 V	0.047 µF	0.33 µF
3 V to 5.5 V	0.1 µF	0.47 µF

Copyright © 2021 Texas Instruments Incorporated

9.2.1 Design Requirements

The recommended V_{CC} is 3.3 V or 5 V. 3 V to 5.5 V is also possible

The maximum recommended bit rate is 250 kbit/s.

9.2.2 Detailed Design Procedure

All DIN inputs must be connected to valid low or high logic levels.

Select capacitor values based on V_{CC} level for best performance.

9.2.3 Application Curve

图 9-2 curves are for 3.3-V VCC and 250-kbit/s alternative bit data stream.

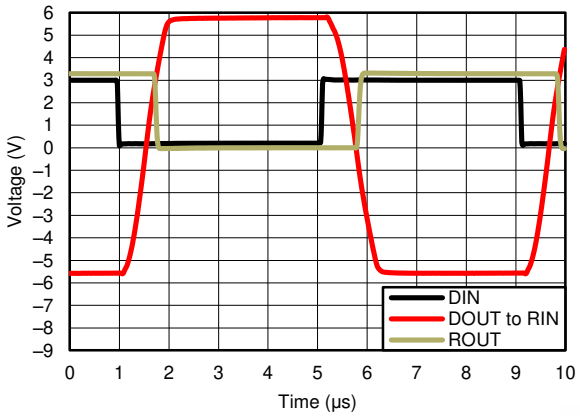

图 9-2. 250 kbit/s Driver to Receiver Loopback Timing Waveform, V_{CC} = 3.3 V

10 Power Supply Recommendations

The supply voltage, V_{CC}, should be between 3 V and 5.5 V. Select the values of the charge-pump capacitors using 表 9-1.

Copyright © 2021 Texas Instruments Incorporated

11 Layout

11.1 Layout Guidelines

Keep the external capacitor traces short, specifically on the C1 and C2 nodes that have the fastest rise and fall times.

11.2 Layout Example

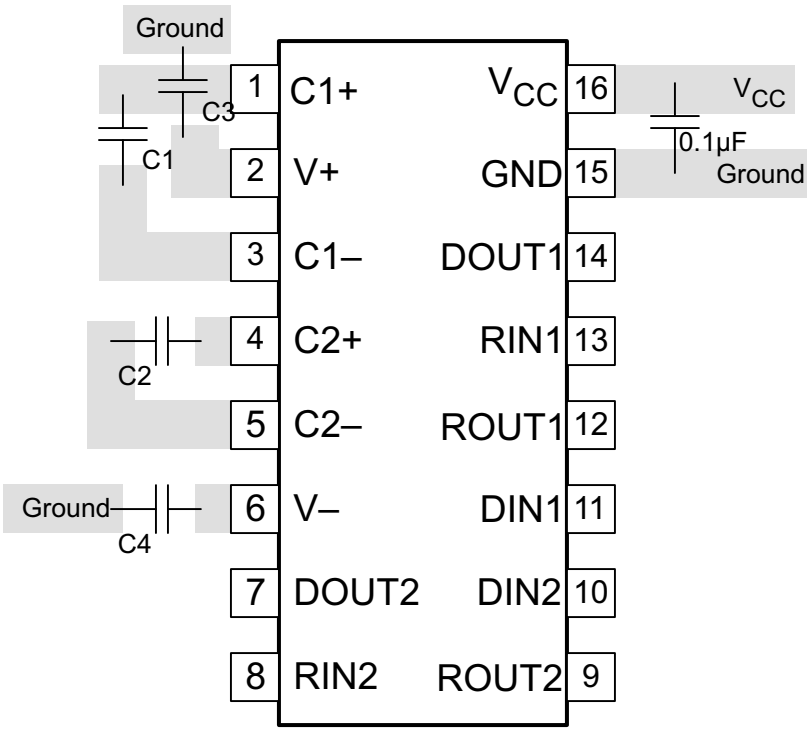

图 11-1. Layout Diagram

12 Device and Documentation Support

12.1 接收文档更新通知

要接收文档更新通知，请导航至 ti.com 上的器件产品文件夹。点击 *订阅更新* 进行注册，即可每周接收产品信息更改摘要。有关更改的详细信息，请查看任何已修订文档中包含的修订历史记录。

12.2 支持资源

TI E2E™ 中文支持论坛是工程师的重要参考资料，可直接从专家处获得快速、经过验证的解答和设计帮助。搜索现有解答或提出自己的问题，获得所需的快速设计帮助。

链接的内容由各个贡献者“按原样”提供。这些内容并不构成 TI 技术规范，并且不一定反映 TI 的观点；请参阅 TI 的使用条款。

12.3 Trademarks

TI E2E™ is a trademark of Texas Instruments.
所有商标均为其各自所有者的财产。

12.4 静电放电警告

静电放电 (ESD) 会损坏这个集成电路。德州仪器 (TI) 建议通过适当的预防措施处理所有集成电路。如果不遵守正确的处理和安装程序，可能会损坏集成电路。

ESD 的损坏小至导致微小的性能降级，大至整个器件故障。精密的集成电路可能更容易受到损坏，这是因为非常细微的参数更改都可能会导致器件与其发布的规格不相符。

12.5 术语表

TI 术语表　　本术语表列出并解释了术语、首字母缩略词和定义。

Mechanical, Packaging, and Orderable Information

The following pages include mechanical packaging and orderable information. This information is the most current data available for the designated devices. This data is subject to change without notice and revision of this document. For browser based versions of this data sheet, refer to the left hand navigation.

Copyright © 2021 Texas Instruments Incorporated

PACKAGING INFORMATION

Orderable Device	Status (1)	Package Type	Package Drawing	Pins	Package Qty	Eco Plan (2)	Lead finish/ Ball material (6)	MSL Peak Temp (3)	Op Temp (°C)	Device Marking (4/5)	Samples
MAX3232ECDBR	ACTIVE	SSOP	DB	16	2000	RoHS & Green	NIPDAU	Level-1-260C-UNLIM	0 to 70	MP232EC	Samples
MAX3232ECDR	ACTIVE	SOIC	D	16	2500	RoHS & Green	NIPDAU	Level-1-260C-UNLIM	0 to 70	MAX3232EC	Samples
MAX3232ECDRE4	ACTIVE	SOIC	D	16	2500	RoHS & Green	NIPDAU	Level-1-260C-UNLIM	0 to 70	MAX3232EC	Samples
MAX3232ECDW	LIFEBUY	SOIC	DW	16	40	RoHS & Green	NIPDAU	Level-1-260C-UNLIM	0 to 70	MAX3232EC	
MAX3232ECDWG4	NRND	SOIC	DW	16	40	RoHS & Green	NIPDAU	Level-1-260C-UNLIM	0 to 70	MAX3232EC	
MAX3232ECDWR	ACTIVE	SOIC	DW	16	2000	RoHS & Green	NIPDAU	Level-1-260C-UNLIM	0 to 70	MAX3232EC	Samples
MAX3232ECPWR	ACTIVE	TSSOP	PW	16	2000	RoHS & Green	NIPDAU	Level-1-260C-UNLIM	0 to 70	MP232EC	Samples
MAX3232EIDBR	ACTIVE	SSOP	DB	16	2000	RoHS & Green	NIPDAU	Level-1-260C-UNLIM	-40 to 85	MP232EI	Samples
MAX3232EIDBRE4	ACTIVE	SSOP	DB	16	2000	RoHS & Green	NIPDAU	Level-1-260C-UNLIM	-40 to 85	MP232EI	Samples
MAX3232EIDR	ACTIVE	SOIC	D	16	2500	RoHS & Green	NIPDAU	Level-1-260C-UNLIM	-40 to 85	MAX3232EI	Samples
MAX3232EIDW	LIFEBUY	SOIC	DW	16	40	RoHS & Green	NIPDAU	Level-1-260C-UNLIM	-40 to 85	MAX3232EI	
MAX3232EIDWG4	NRND	SOIC	DW	16	40	RoHS & Green	NIPDAU	Level-1-260C-UNLIM	-40 to 85	MAX3232EI	
MAX3232EIDWR	ACTIVE	SOIC	DW	16	2000	RoHS & Green	NIPDAU	Level-1-260C-UNLIM	-40 to 85	MAX3232EI	Samples
MAX3232EIPWR	ACTIVE	TSSOP	PW	16	2000	RoHS & Green	NIPDAU	Level-1-260C-UNLIM	-40 to 85	MP232EI	Samples
MAX3232EIPWRG4	ACTIVE	TSSOP	PW	16	2000	RoHS & Green	NIPDAU	Level-1-260C-UNLIM	-40 to 85	MP232EI	Samples

(1) The marketing status values are defined as follows:
ACTIVE: Product device recommended for new designs.
LIFEBUY: TI has announced that the device will be discontinued, and a lifetime-buy period is in effect.
NRND: Not recommended for new designs. Device is in production to support existing customers, but TI does not recommend using this part in a new design.
PREVIEW: Device has been announced but is not in production. Samples may or may not be available.
OBSOLETE: TI has discontinued the production of the device.

(2) **RoHS:** TI defines "RoHS" to mean semiconductor products that are compliant with the current EU RoHS requirements for all 10 RoHS substances, including the requirement that RoHS substance do not exceed 0.1% by weight in homogeneous materials. Where designed to be soldered at high temperatures, "RoHS" products are suitable for use in specified lead-free processes. TI may reference these types of products as "Pb-Free".
RoHS Exempt: TI defines "RoHS Exempt" to mean products that contain lead but are compliant with EU RoHS pursuant to a specific EU RoHS exemption.

Green: TI defines "Green" to mean the content of Chlorine (Cl) and Bromine (Br) based flame retardants meet JS709B low halogen requirements of <=1000ppm threshold. Antimony trioxide based flame retardants must also meet the <=1000ppm threshold requirement.

(3) MSL, Peak Temp. - The Moisture Sensitivity Level rating according to the JEDEC industry standard classifications, and peak solder temperature.

(4) There may be additional marking, which relates to the logo, the lot trace code information, or the environmental category on the device.

(5) Multiple Device Markings will be inside parentheses. Only one Device Marking contained in parentheses and separated by a "~" will appear on a device. If a line is indented then it is a continuation of the previous line and the two combined represent the entire Device Marking for that device.

(6) Lead finish/Ball material - Orderable Devices may have multiple material finish options. Finish options are separated by a vertical ruled line. Lead finish/Ball material values may wrap to two lines if the finish value exceeds the maximum column width.

Important Information and Disclaimer: The information provided on this page represents TI's knowledge and belief as of the date that it is provided. TI bases its knowledge and belief on information provided by third parties, and makes no representation or warranty as to the accuracy of such information. Efforts are underway to better integrate information from third parties. TI has taken and continues to take reasonable steps to provide representative and accurate information but may not have conducted destructive testing or chemical analysis on incoming materials and chemicals. TI and TI suppliers consider certain information to be proprietary, and thus CAS numbers and other limited information may not be available for release.

In no event shall TI's liability arising out of such information exceed the total purchase price of the TI part(s) at issue in this document sold by TI to Customer on an annual basis.

OTHER QUALIFIED VERSIONS OF MAX3232E :

- Automotive : MAX3232E-Q1

NOTE: Qualified Version Definitions:

- Automotive - Q100 devices qualified for high-reliability automotive applications targeting zero defects

TAPE AND REEL INFORMATION

REEL DIMENSIONS

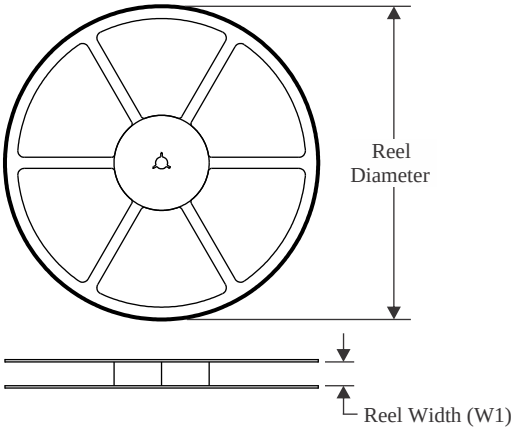

TAPE DIMENSIONS

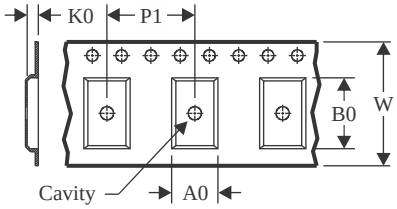

A0	Dimension designed to accommodate the component width
B0	Dimension designed to accommodate the component length
K0	Dimension designed to accommodate the component thickness
W	Overall width of the carrier tape
P1	Pitch between successive cavity centers

QUADRANT ASSIGNMENTS FOR PIN 1 ORIENTATION IN TAPE

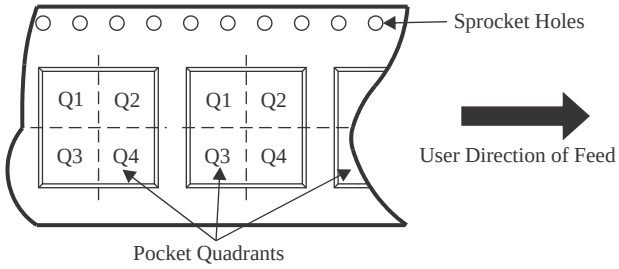

*All dimensions are nominal

Device	Package Type	Package Drawing	Pins	SPQ	Reel Diameter (mm)	Reel Width W1 (mm)	A0 (mm)	B0 (mm)	K0 (mm)	P1 (mm)	W (mm)	Pin1 Quadrant
MAX3232ECDBR	SSOP	DB	16	2000	330.0	16.4	8.35	6.6	2.4	12.0	16.0	Q1
MAX3232ECDR	SOIC	D	16	2500	330.0	16.4	6.5	10.3	2.1	8.0	16.0	Q1
MAX3232ECDWR	SOIC	DW	16	2000	330.0	16.4	10.75	10.7	2.7	12.0	16.0	Q1
MAX3232ECPWR	TSSOP	PW	16	2000	330.0	12.4	6.9	5.6	1.6	8.0	12.0	Q1
MAX3232ECPWR	TSSOP	PW	16	2000	330.0	12.4	6.9	5.6	1.6	8.0	12.0	Q1
MAX3232EIDBR	SSOP	DB	16	2000	330.0	16.4	8.35	6.6	2.4	12.0	16.0	Q1
MAX3232EIDR	SOIC	D	16	2500	330.0	16.4	6.5	10.3	2.1	8.0	16.0	Q1
MAX3232EIDWR	SOIC	DW	16	2000	330.0	16.4	10.75	10.7	2.7	12.0	16.0	Q1
MAX3232EIPWR	TSSOP	PW	16	2000	330.0	12.4	6.9	5.6	1.6	8.0	12.0	Q1

TAPE AND REEL BOX DIMENSIONS

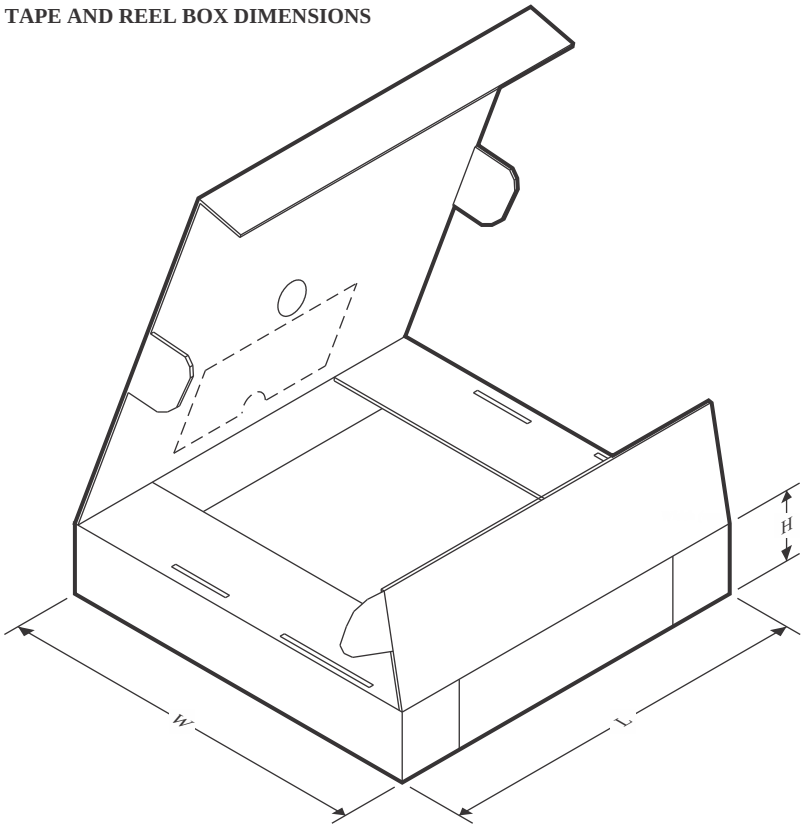

*All dimensions are nominal

Device	Package Type	Package Drawing	Pins	SPQ	Length (mm)	Width (mm)	Height (mm)
MAX3232ECDBR	SSOP	DB	16	2000	356.0	356.0	35.0
MAX3232ECDR	SOIC	D	16	2500	356.0	356.0	35.0
MAX3232ECDWR	SOIC	DW	16	2000	350.0	350.0	43.0
MAX3232ECPWR	TSSOP	PW	16	2000	356.0	356.0	35.0
MAX3232ECPWR	TSSOP	PW	16	2000	356.0	356.0	35.0
MAX3232EIDBR	SSOP	DB	16	2000	356.0	356.0	35.0
MAX3232EIDR	SOIC	D	16	2500	356.0	356.0	35.0
MAX3232EIDWR	SOIC	DW	16	2000	350.0	350.0	43.0
MAX3232EIPWR	TSSOP	PW	16	2000	356.0	356.0	35.0

TUBE

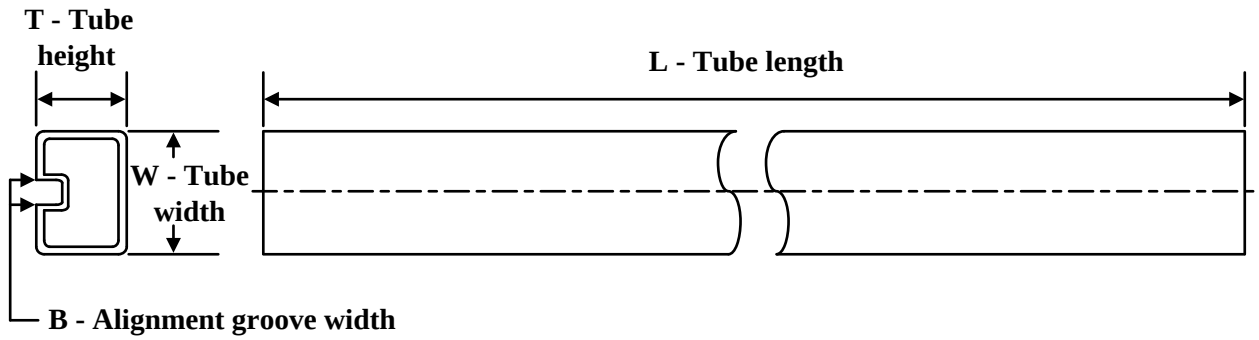

*All dimensions are nominal

Device	Package Name	Package Type	Pins	SPQ	L (mm)	W (mm)	T (µm)	B (mm)
MAX3232ECDW	DW	SOIC	16	40	506.98	12.7	4826	6.6
MAX3232ECDWG4	DW	SOIC	16	40	506.98	12.7	4826	6.6
MAX3232EIDW	DW	SOIC	16	40	506.98	12.7	4826	6.6
MAX3232EIDWG4	DW	SOIC	16	40	506.98	12.7	4826	6.6

D (R–PDSO–G16) PLASTIC SMALL OUTLINE

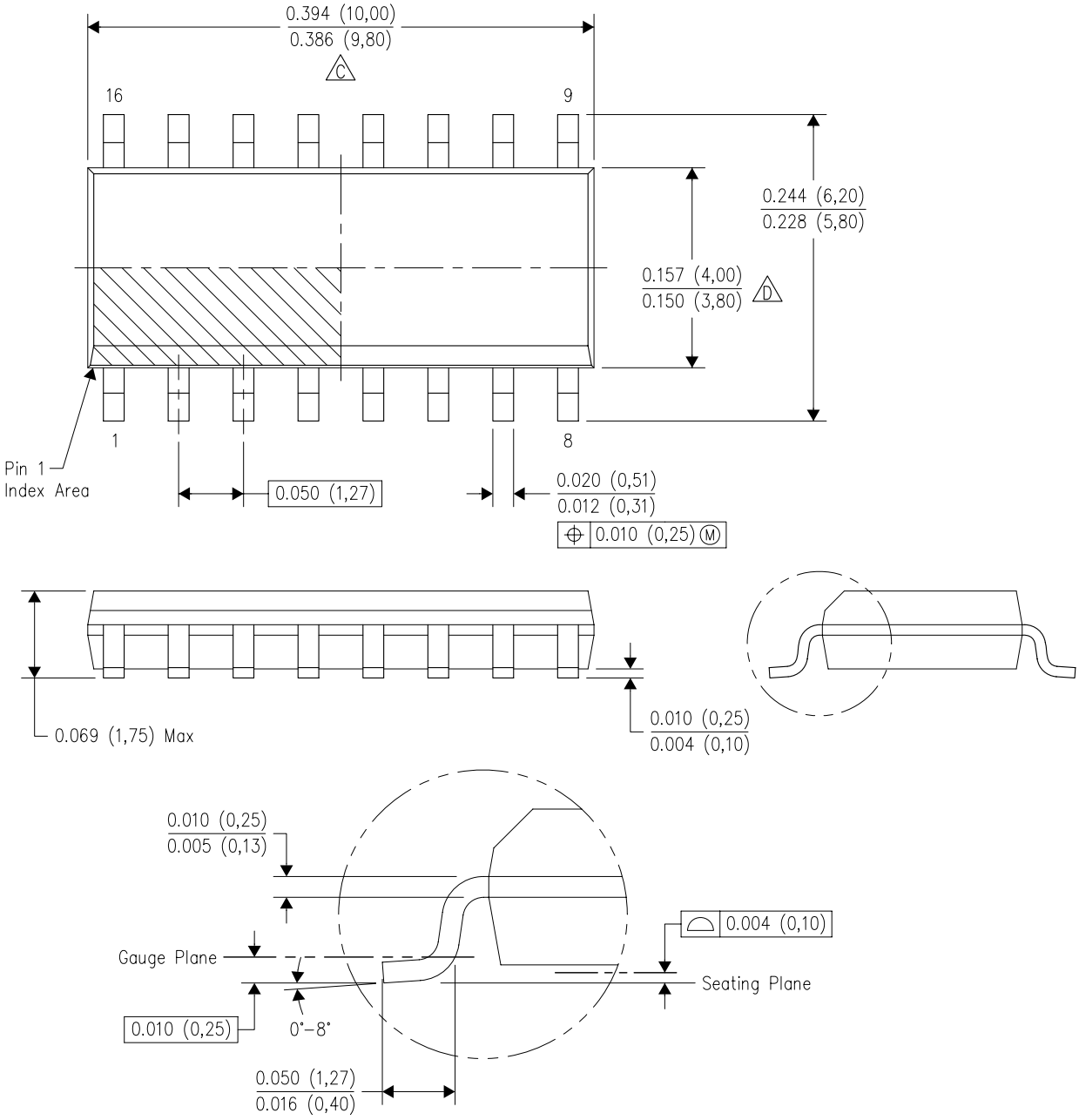

NOTES:
A. All linear dimensions are in inches (millimeters).
B. This drawing is subject to change without notice.
C. Body length does not include mold flash, protrusions, or gate burrs. Mold flash, protrusions, or gate burrs shall not exceed 0.006 (0,15) each side.
D. Body width does not include interlead flash. Interlead flash shall not exceed 0.017 (0,43) each side.
E. Reference JEDEC MS–012 variation AC.

PACKAGE OUTLINE

PW0016A

TSSOP - 1.2 mm max height

SMALL OUTLINE PACKAGE

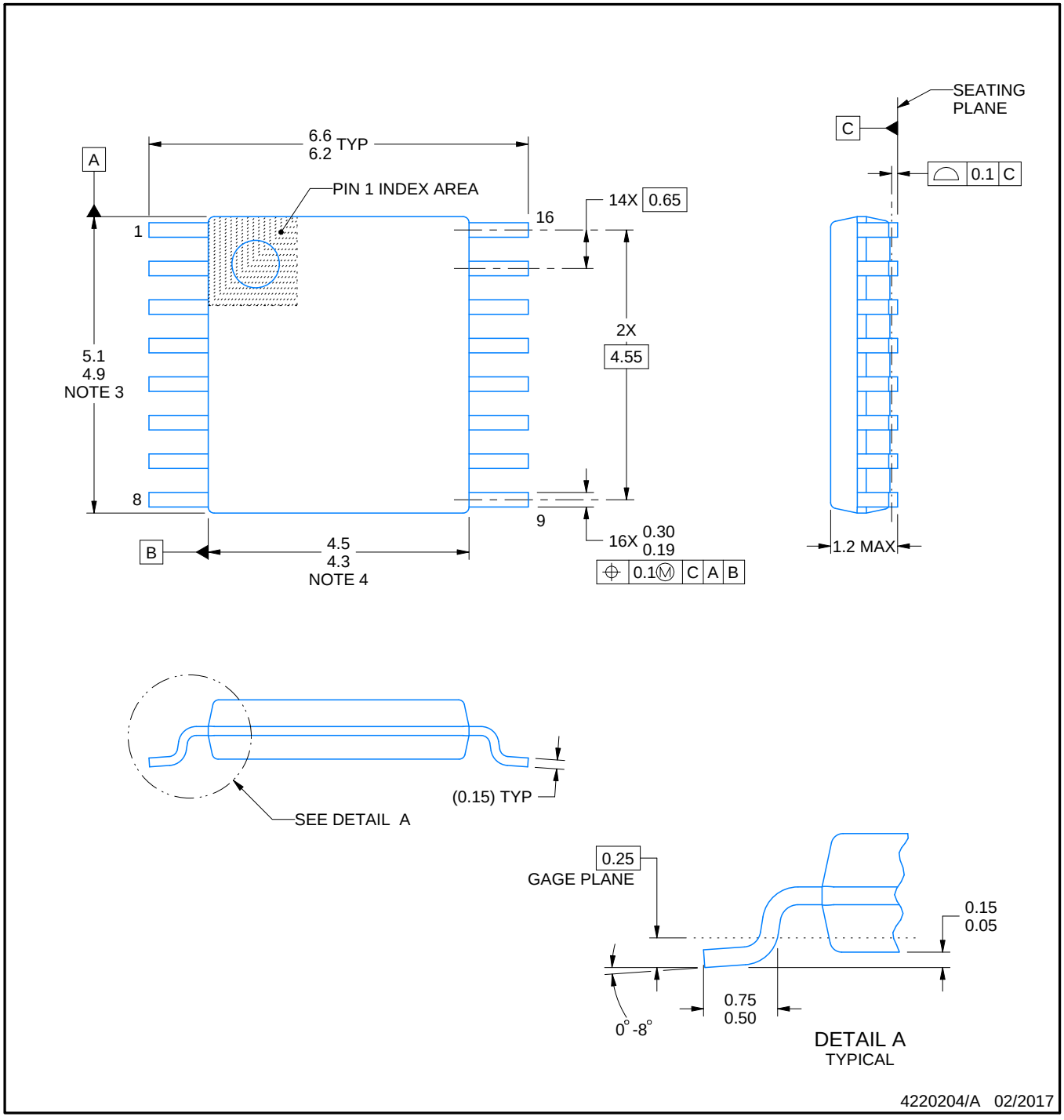

NOTES:

1. All linear dimensions are in millimeters. Any dimensions in parenthesis are for reference only. Dimensioning and tolerancing per ASME Y14.5M.
2. This drawing is subject to change without notice.
3. This dimension does not include mold flash, protrusions, or gate burrs. Mold flash, protrusions, or gate burrs shall not exceed 0.15 mm per side.
4. This dimension does not include interlead flash. Interlead flash shall not exceed 0.25 mm per side.
5. Reference JEDEC registration MO-153.

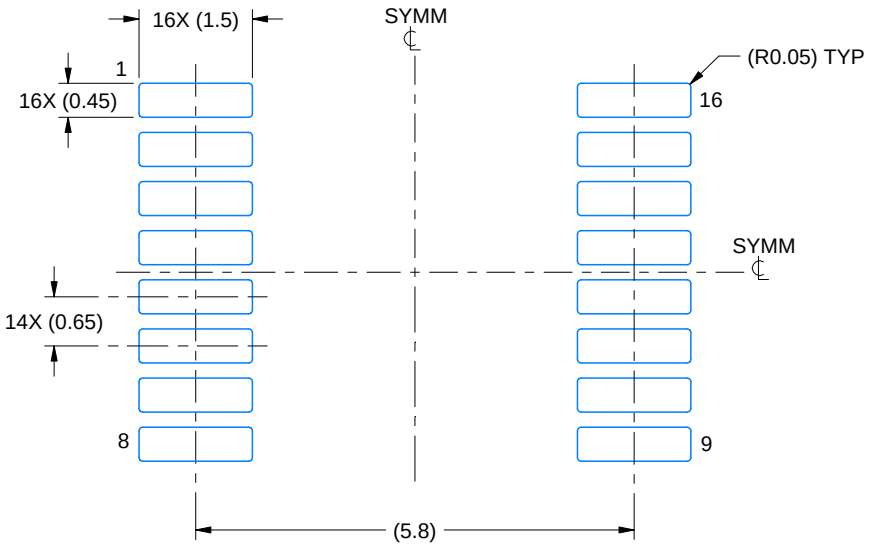

LAND PATTERN EXAMPLE
EXPOSED METAL SHOWN
SCALE: 10X

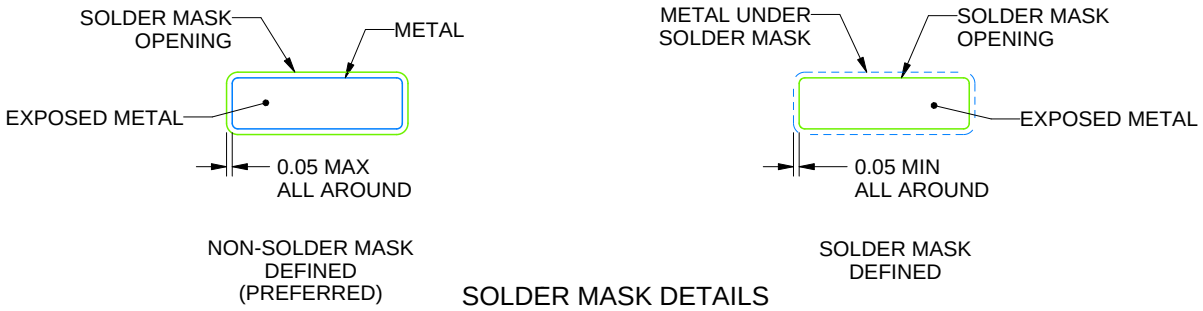

SOLDER MASK DETAILS

4220204/A 02/2017

NOTES: (continued)

6. Publication IPC-7351 may have alternate designs.
7. Solder mask tolerances between and around signal pads can vary based on board fabrication site.

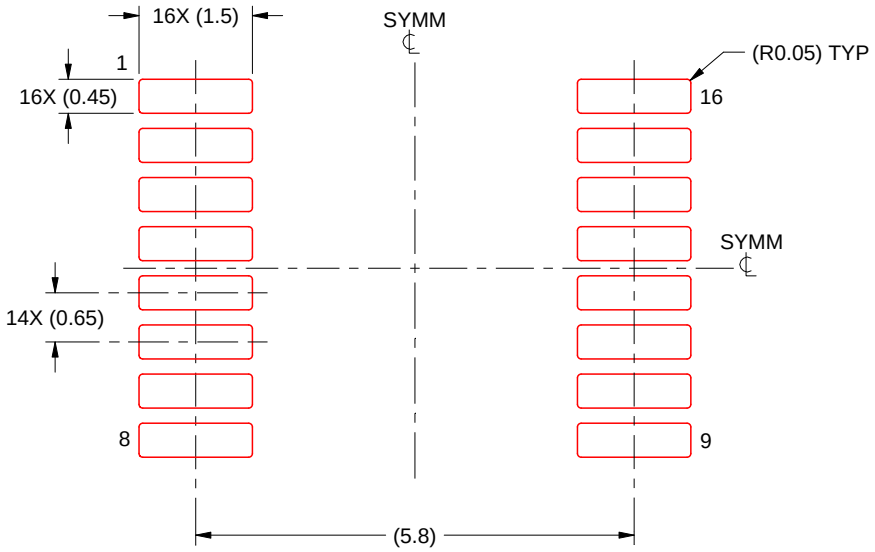

SOLDER PASTE EXAMPLE
BASED ON 0.125 mm THICK STENCIL
SCALE: 10X

4220204/A 02/2017

NOTES: (continued)

8. Laser cutting apertures with trapezoidal walls and rounded corners may offer better paste release. IPC-7525 may have alternate design recommendations.
9. Board assembly site may have different recommendations for stencil design.

PACKAGE OUTLINE

DB0016A

SSOP - 2 mm max height

SMALL OUTLINE PACKAGE

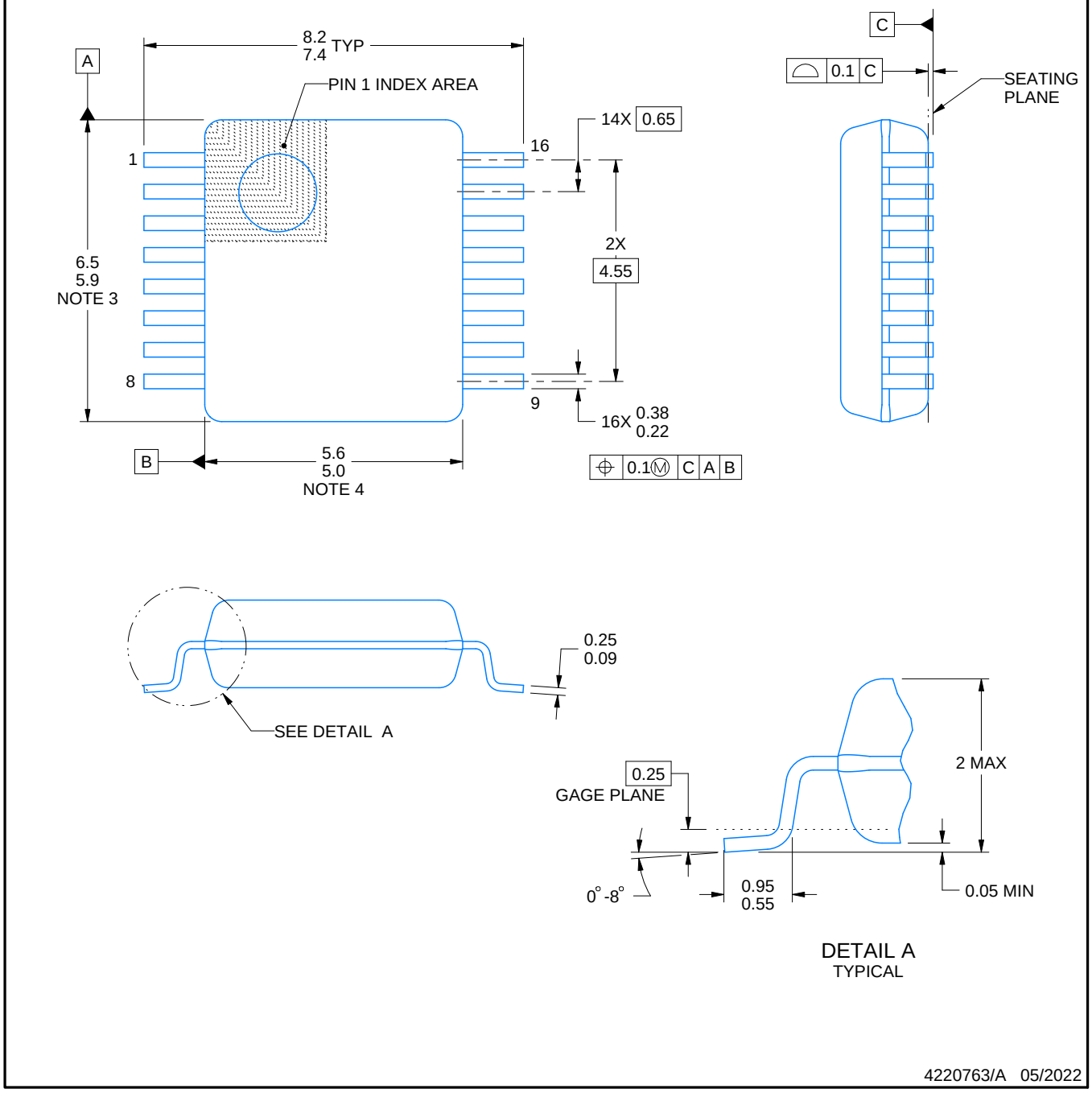

NOTES:

1. All linear dimensions are in millimeters. Any dimensions in parenthesis are for reference only. Dimensioning and tolerancing per ASME Y14.5M.
2. This drawing is subject to change without notice.
3. This dimension does not include mold flash, protrusions, or gate burrs. Mold flash, protrusions, or gate burrs shall not exceed 0.15 mm per side.
4. Reference JEDEC registration MO-150.

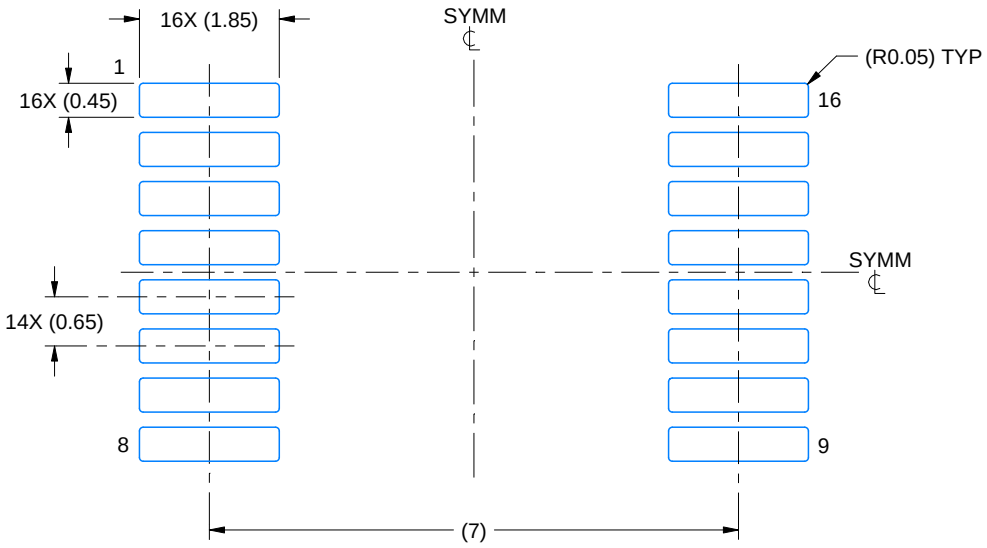

LAND PATTERN EXAMPLE
EXPOSED METAL SHOWN
SCALE: 10X

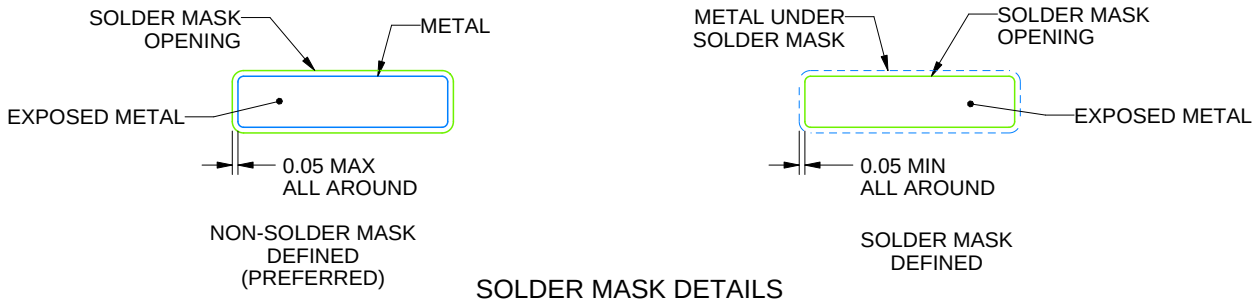

SOLDER MASK DETAILS

4220763/A 05/2022

NOTES: (continued)

5. Publication IPC-7351 may have alternate designs.
6. Solder mask tolerances between and around signal pads can vary based on board fabrication site.

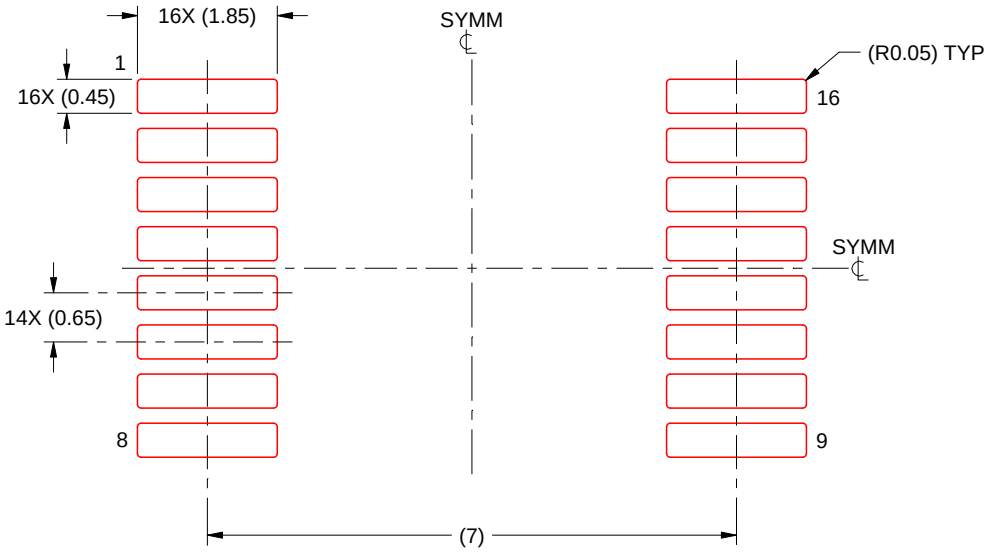

SOLDER PASTE EXAMPLE
BASED ON 0.125 mm THICK STENCIL
SCALE: 10X

4220763/A 05/2022

NOTES: (continued)

7. Laser cutting apertures with trapezoidal walls and rounded corners may offer better paste release. IPC-7525 may have alternate design recommendations.
8. Board assembly site may have different recommendations for stencil design.

GENERIC PACKAGE VIEW

DW 16

SOIC - 2.65 mm max height

7.5 x 10.3, 1.27 mm pitch

SMALL OUTLINE INTEGRATED CIRCUIT

This image is a representation of the package family, actual package may vary.
Refer to the product data sheet for package details.

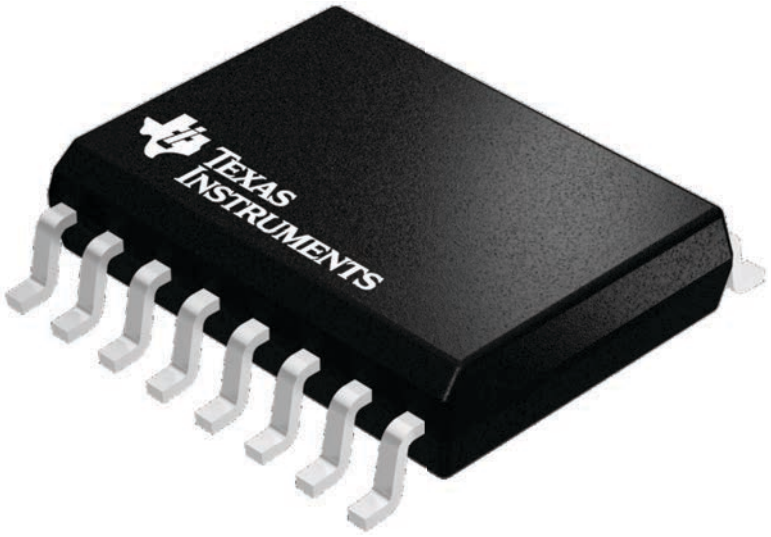

4224780/A

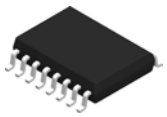

PACKAGE OUTLINE

DW0016A

SOIC - 2.65 mm max height

SOIC

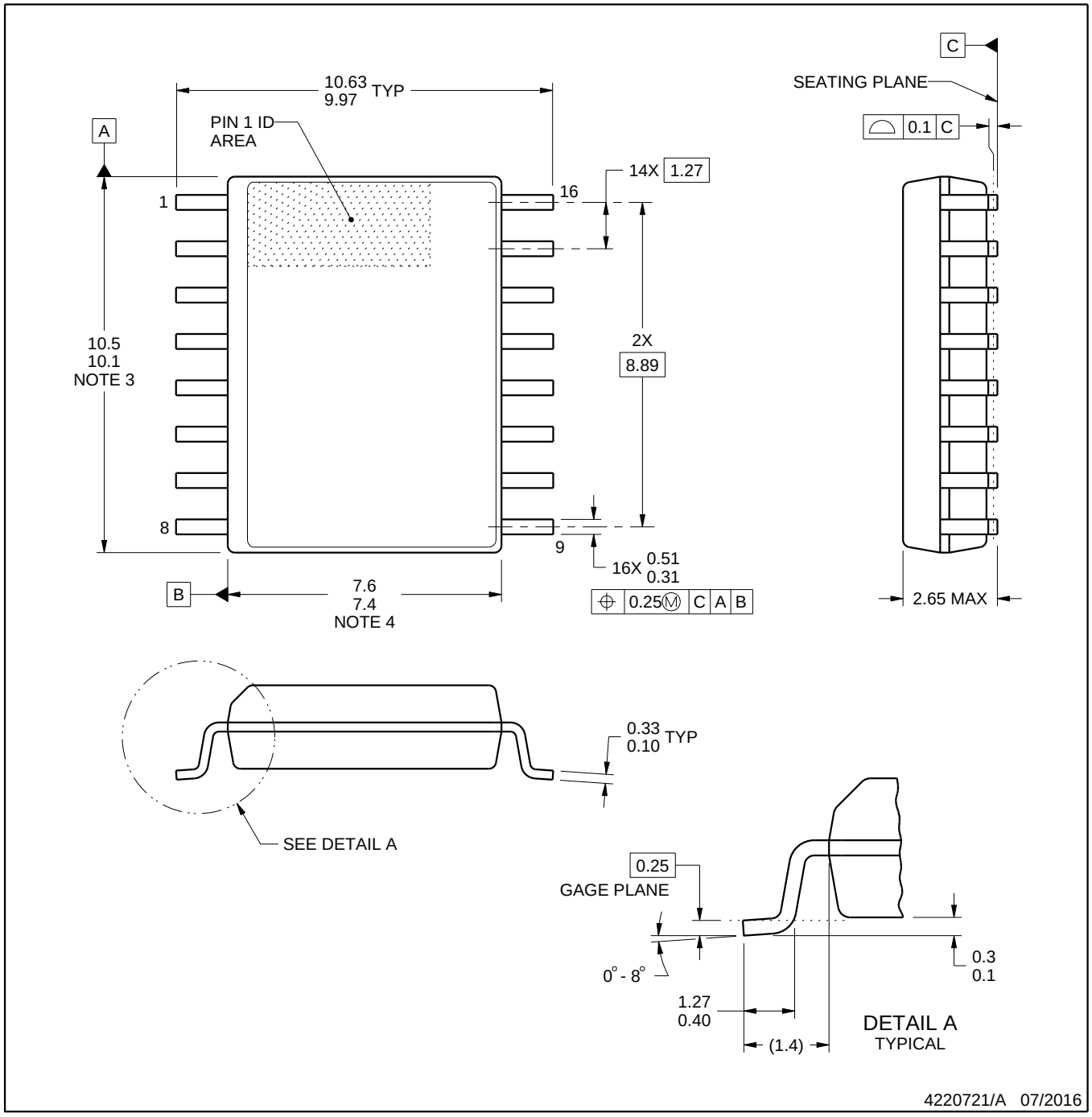

NOTES:

1. All linear dimensions are in millimeters. Dimensions in parenthesis are for reference only. Dimensioning and tolerancing per ASME Y14.5M.
2. This drawing is subject to change without notice.
3. This dimension does not include mold flash, protrusions, or gate burrs. Mold flash, protrusions, or gate burrs shall not exceed 0.15 mm, per side.
4. This dimension does not include interlead flash. Interlead flash shall not exceed 0.25 mm, per side.
5. Reference JEDEC registration MS-013.

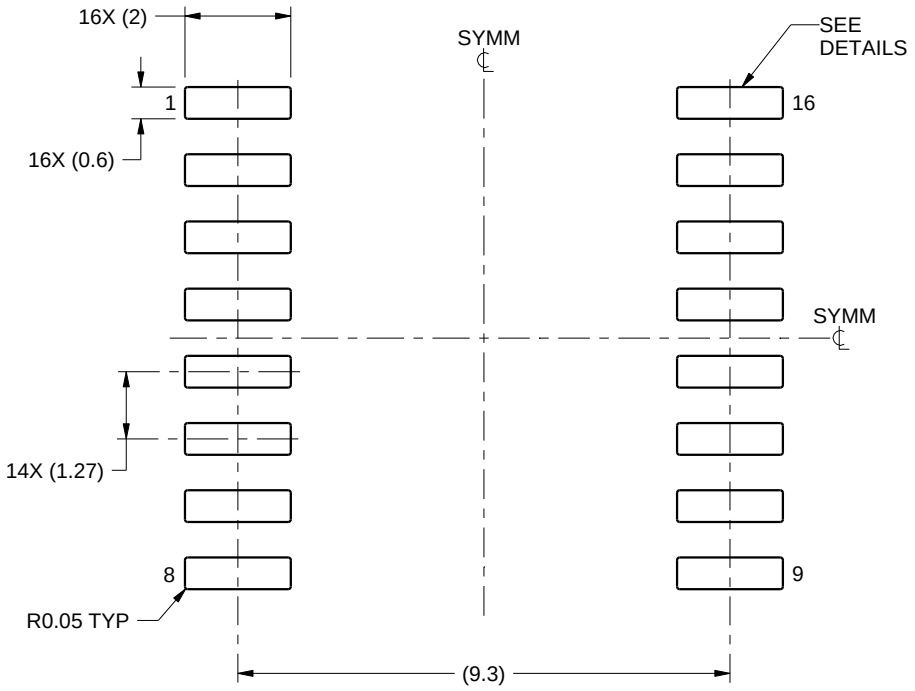

LAND PATTERN EXAMPLE
SCALE:7X

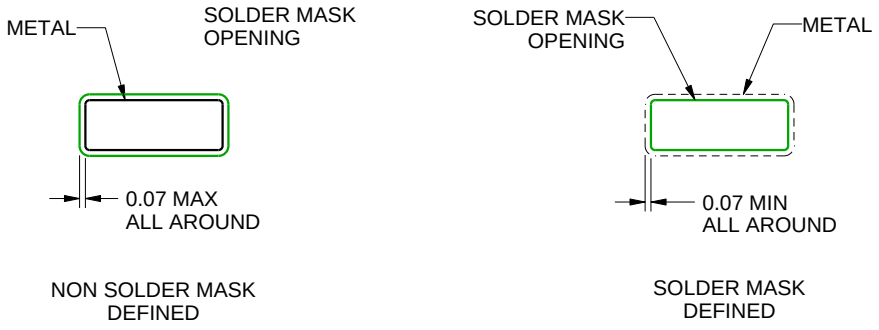

SOLDER MASK DETAILS

4220721/A 07/2016

NOTES: (continued)

6. Publication IPC-7351 may have alternate designs.
7. Solder mask tolerances between and around signal pads can vary based on board fabrication site.

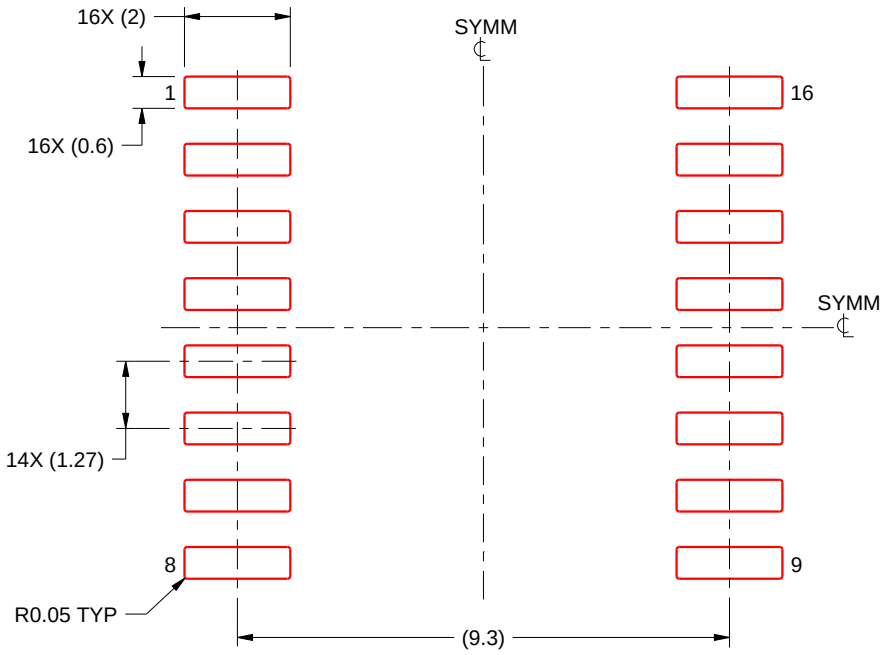

SOLDER PASTE EXAMPLE
BASED ON 0.125 mm THICK STENCIL
SCALE:7X

4220721/A 07/2016

NOTES: (continued)

8. Laser cutting apertures with trapezoidal walls and rounded corners may offer better paste release. IPC-7525 may have alternate design recommendations.
9. Board assembly site may have different recommendations for stencil design.

重要声明和免责声明

TI“按原样”提供技术和可靠性数据（包括数据表）、设计资源（包括参考设计）、应用或其他设计建议、网络工具、安全信息和其他资源，不保证没有瑕疵且不做出任何明示或暗示的担保，包括但不限于对适销性、某特定用途方面的适用性或不侵犯任何第三方知识产权的暗示担保。

这些资源可供使用 TI 产品进行设计的熟练开发人员使用。您将自行承担以下全部责任：(1) 针对您的应用选择合适的 TI 产品，(2) 设计、验证并测试您的应用，(3) 确保您的应用满足相应标准以及任何其他功能安全、信息安全、监管或其他要求。

这些资源如有变更，恕不另行通知。TI 授权您仅可将这些资源用于研发本资源所述的 TI 产品的应用。严禁对这些资源进行其他复制或展示。您无权使用任何其他 TI 知识产权或任何第三方知识产权。您应全额赔偿因在这些资源的使用中对 TI 及其代表造成的任何索赔、损害、成本、损失和债务，TI 对此概不负责。

TI 提供的产品受 TI 的销售条款或 ti.com 上其他适用条款/TI 产品随附的其他适用条款的约束。TI 提供这些资源并不会扩展或以其他方式更改 TI 针对 TI 产品发布的适用的担保或担保免责声明。

TI 反对并拒绝您可能提出的任何其他或不同的条款。

邮寄地址：Texas Instruments, Post Office Box 655303, Dallas, Texas 75265
Copyright © 2023，德州仪器 (TI) 公司