UMW LTV-356T

1.Description

UMW LTV-356T is a small shape chip optoelectronic coupling device, suitable for surface mount production. LTV-356T is a optocoupler composed of a GaAs lightemitting diode and a phototransistor. Its volume is smaller than dip, and it is suitable for high-density surface mount applications, such as programmable logic controller.

2.Applications

- Switching power supply, smart meter
- Industrial control, measuring instruments
- Office equipment, such as copiers
- Such as household appliances, fans, etc

3.Features

- Current conversion ratio (CTR) range: 50 ~ 600% (i_f=5mA, V_{CE}=5V)
- Input output isolation voltage (V_{ISO}=3750V_{RMS})
- Collector Emitter Breakdown Voltage B_{VCEO}≥80V
- Working temperature: - 55 - 110 °C
- UL -approved : UL 1577, File No.E547318
- Accord with REACH and RoHS

4.Pinning information

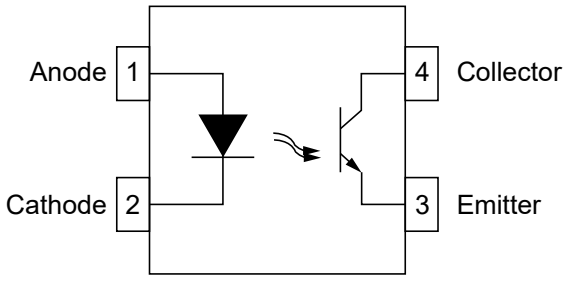

SOP-4

5.Absolute Maximum Ratings

Parameter	Symbol	Value	Unit
Input			
Forward Current	I_F	50	mA
Forward Pulse Current ,(100μs pulse, 100Hz frequency)	I_{FP}	1	A
Reverse Voltage	V_R	6	V
Power Waste	P	70	mW
Junction Temperature	T_J	125	°C
Output			
Collector Power Consumption	P_C	150	mW
Collector Current	I_C	50	mA
Collector Emitter Voltage	V_{CEO}	80	V
Emitter Collector Voltage	V_{ECO}	7	V
Junction Temperature	T_J	125	°C
Total Power Dissipation	P_{TOT}	200	mW
Isolation Voltage	V_{ISO}	3750	Vrms
Working Temperature	T_{OPR}	-55 to 110	°C
Storage Temperature	T_{STG}	-55 to 125	°C
Welding Temperature	T_{SOL}	260	°C

6.Electrical Characteristics

Parameter	Symbol	Conditions	Min	Typ	Max	Units
INPUT						
Forward Voltage	V_F	I_F=20mA		1.2	1.4	V
Reverse Current	I_R	V_R=5V			10	μA
Terminal capacitance	C_t	V=0, f=1kHZ		30	250	pF
OUTPUT						
Collector Dark Current	I_{CEO}	V_{CE}=70V			100	nA
Collector-Emitter Breakdown Voltage	BV_{CEO}	I_C=0.1mA, I_F=0	80			V
	BV_{ECO}	I_E=0.1mA, I_F=0	7			V
Transmission Characteristics						
Current conversion ratio	CTR	I_F=5mA, V_{CE}=5V	50		600	%
Collector Emitter Saturation Voltage Drop	$V_{CE(sat)}$	I_F=20mA, I_C=1mA		0.1	0.2	V
Isolation resistance	R_{ISO}	DC1000V, 40 ~ 60% R.H.	$1x10^{11}$			Ω
Isolation capacitance	C_f	V=0, f=1MHz		0.6	1	pF
Collector Emitter capacitance	C_{CE}	V=0, f=1MHz		10		pF
Cut-off Frequency	F_C	V_{CE}=5V, I_C=2mA, R_L=100Ω,-3dB		80		kHz
Switching Time						
rise time	T_r	V_{CE}=10V, I_C=2mA		4	18	μs
Descent time	T_f	R_L=100Ω		3	18	μs

* CTR=I_C/I_F x 100%

7.CTR classification table

Model	Classification standard	I_C(mA)		Corresponding CTR%	
		I_F=5mA, V_{CE}=5V, Ta=25°C		I_F=5mA, V_{CE}=5V, Ta=25°C	
		Min	Max	Min	Max
UMW LTV-356T	Blank	2.5	30	50	600
	A	4	8	80	160
	B	6.5	13	130	260
	C	10	20	200	400
	D	15	30	300	600
	A or B	4	13	80	160
	B or C	6.5	20	130	400
	C or D	10	30	200	600
	A.B or C	4	20	80	400
	B,C or D	6.5	30	130	600
	A,B,C or D	4	30	80	600

8.Test circuit

Test Circuit for Response Time

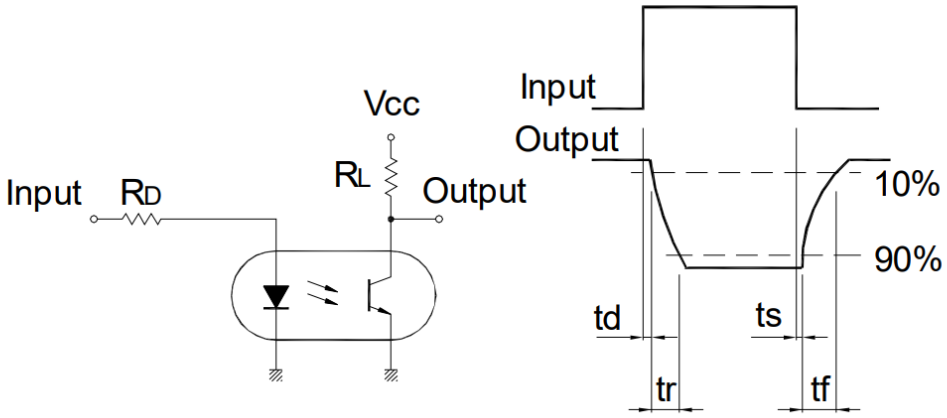

Test Circuit for Frequency Response

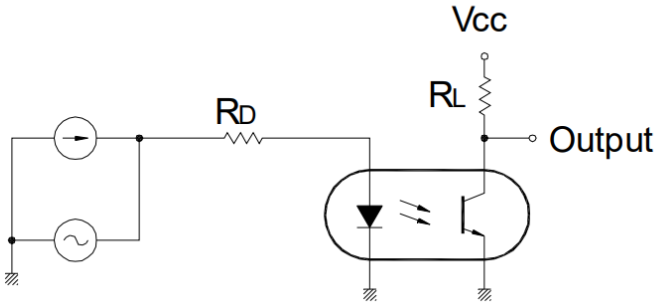

9.1Typical Characteristic

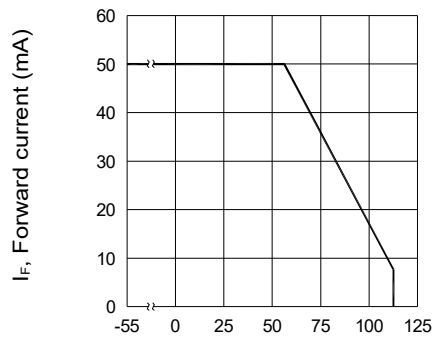

Figure 1: Forward Current vs. Ambient Temperature

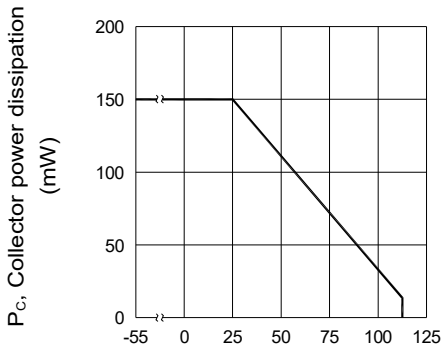

Figure 2: Collector Power Dissipation vs. Ambient Temperature

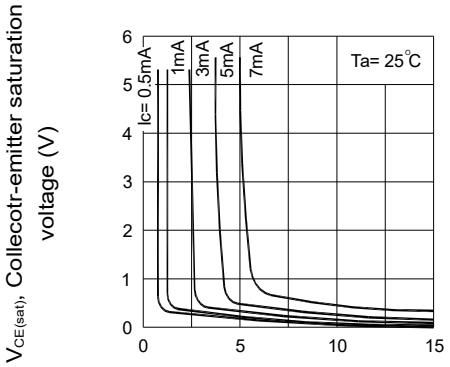

Figure 3: Collector-emitter Saturation Voltage vs. Forward Current

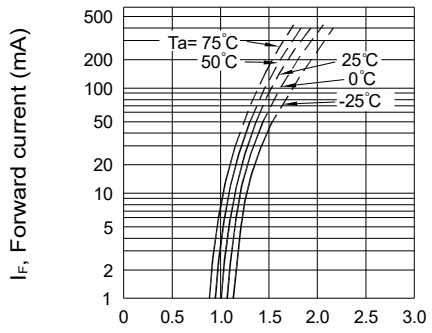

Figure 4: Forward Current vs. Forward Voltage

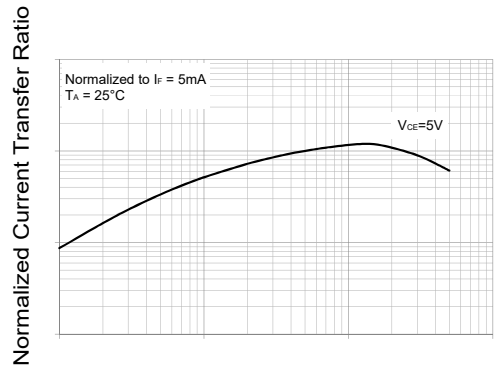

Figure 5: Current Transfer Ratio vs. Forward Current

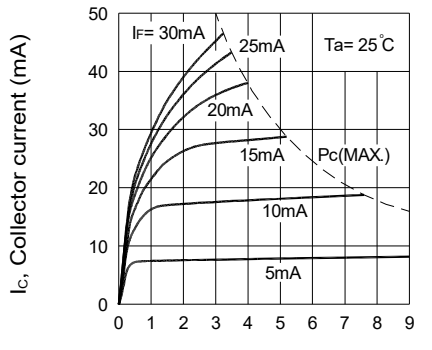

Figure 6: Collector Current vs. Collector-emitter Voltage

9.2Typical Characteristic

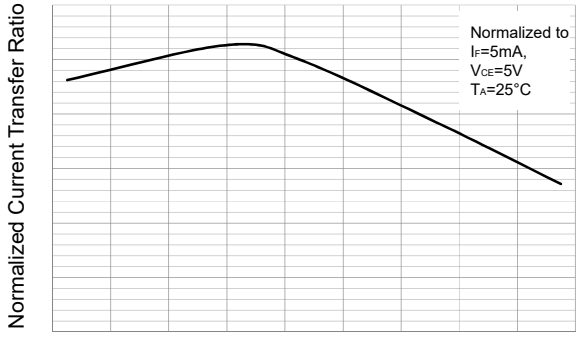

Figure 7: Relative Current Transfer Ratio vs. Ambient Temperature

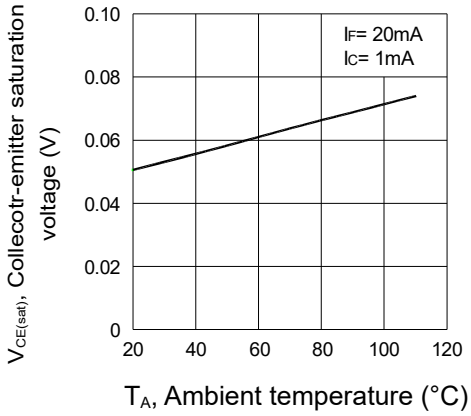

Figure 8: Collector-emitter Saturation Voltage vs. Ambient Temperature

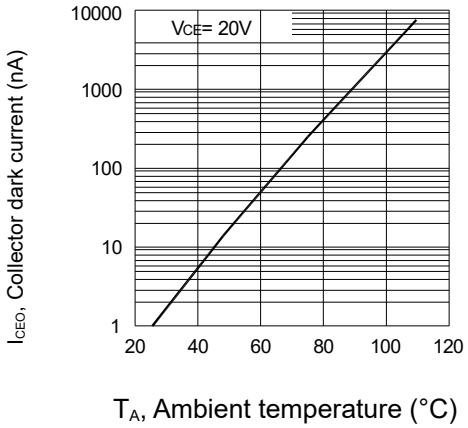

Figure 9: Collector Dark Current vs. Ambient Temperature

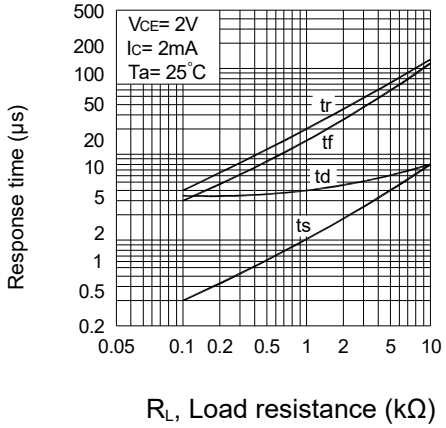

Figure 10: Response Time vs. Load Resistance

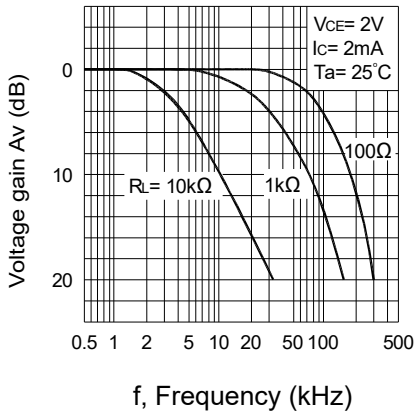

Figure 11: Frequency Response

10.Reflow temperature curve

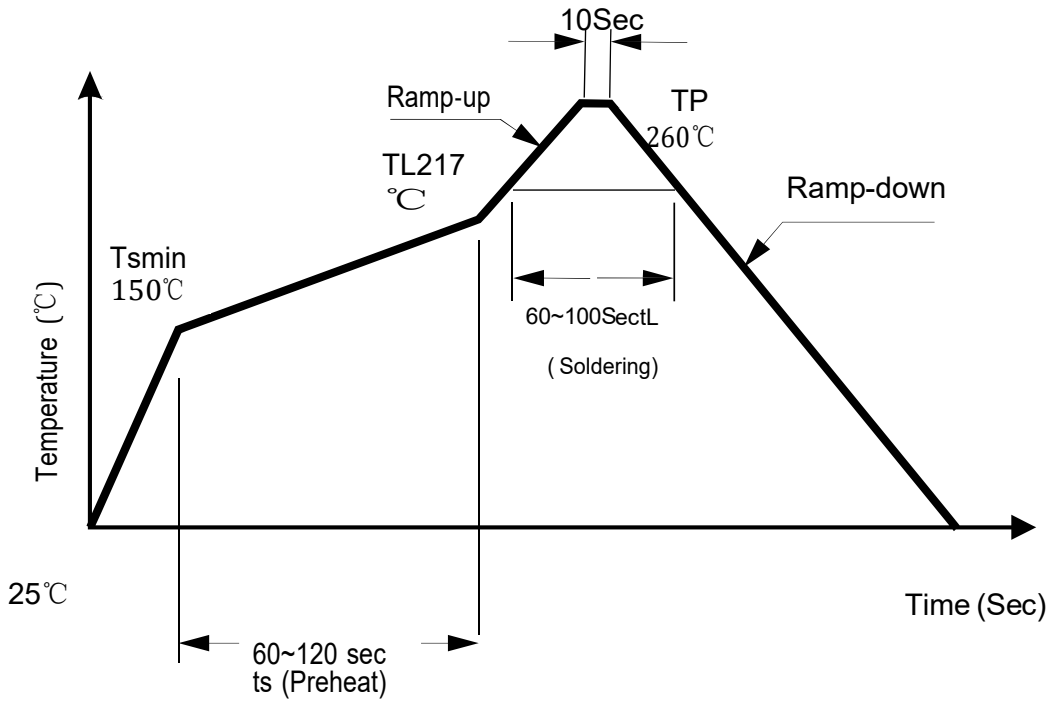

11.SOP-4 Package Outline Dimensions

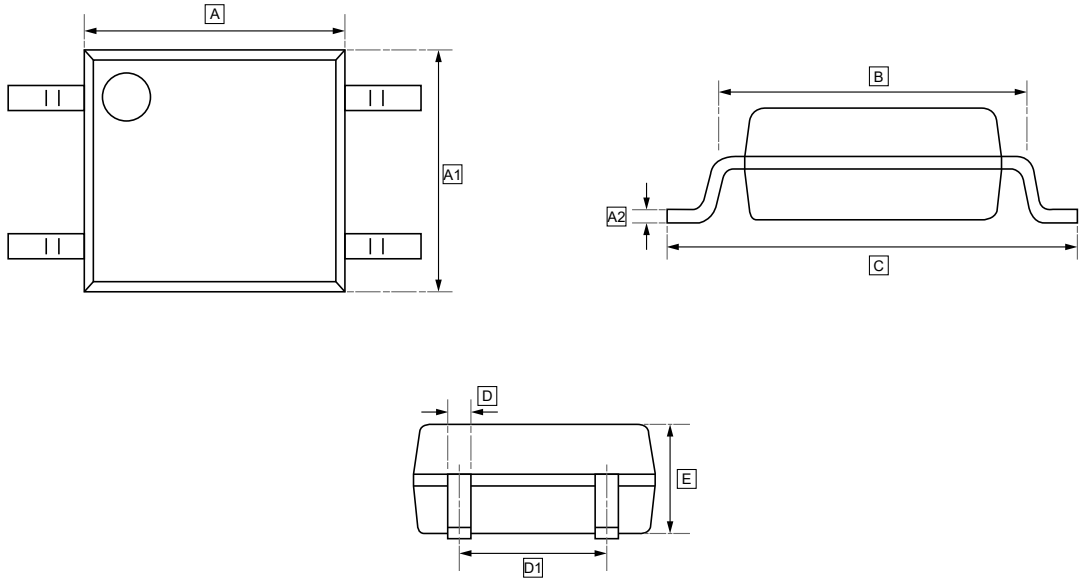

DIMENSIONS (mm are the original dimensions)

Symbol	A	A1	A2	B	C	D	D1	E
Min	4.40	3.60	0.15	5.00	6.70	0.30	2.54	1.82
Max	4.80	4.10		5.40	7.30	0.50	TYP	2.02

12.Ordering information

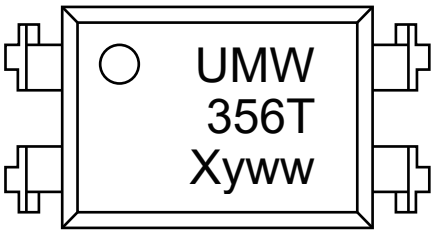

yww: Batch Code
X: Representative Gear

Order Code	Package	Base QTY	Delivery Mode
UMW LTV-356T-A	SOP-4	3000	Tape and reel
UMW LTV-356T-B	SOP-4	3000	Tape and reel
UMW LTV-356T-C	SOP-4	3000	Tape and reel
UMW LTV-356T-D	SOP-4	3000	Tape and reel

13.Disclaimer

UMW reserves the right to make changes to all products, specifications. Customers should obtain the latest version of product documentation and verify the completeness and currency of the information before placing an order.

When applying our products, please do not exceed the maximum rated values, as this may affect the reliability of the entire system. Under certain conditions, any semiconductor product may experience faults or failures. Buyers are responsible for adhering to safety standards and implementing safety measures during system design, prototyping, and manufacturing when using our products to prevent potential failure risks that could lead to personal injury or property damage.

Unless explicitly stated in writing, UMW products are not intended for use in medical, life-saving, or life-sustaining applications, nor for any other applications where product failure could result in personal injury or death. If customers use or sell the product for such applications without explicit authorization, they assume all associated risks.

When reselling, applying, or exporting, please comply with export control laws and regulations of China, the United States, the United Kingdom, the European Union, and other relevant countries, regions, and international organizations.

This document and any actions by UMW do not grant any intellectual property rights, whether express or implied, by estoppel or otherwise. The product names and marks mentioned herein may be trademarks of their respective owners.