1.Description

UMW LMV321/358/324 is a rail-to-rail input, output voltage feedback, low power consumption operational amplifier. It has wide input common mode voltage and output swing. The minimum working voltage can be up to 2.1V, and the maximum working voltage is recommended to be 5.5V. Used as power amplifier in all kinds of pocket or portable stereo radio recorders.

2.Features

- Rail to rail input and output, typical 0.8mv V_{OS}
- Gain bandwidth product 1MHz
- Low input bias current: 10nA (TYP)
- Low Power consumption
- 2.1V ~ 5.5V working voltage
- Low operating current:
  LMV321: 45uA, LMV358: 90uA, LMV324: 180uA

3.Application

- ASIC input and output amplifier
- Sensor interface
- Piezoelectric sensing amplifier
- Battery-powered equipment
- The mobile communication
- Audio output

4.Pinning information

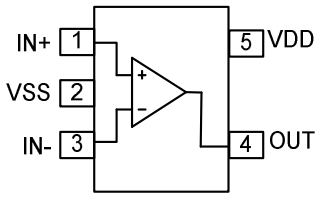

SOT23-5
SC70-5

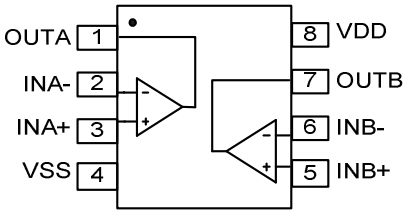

SOP-8
TSSOP-8

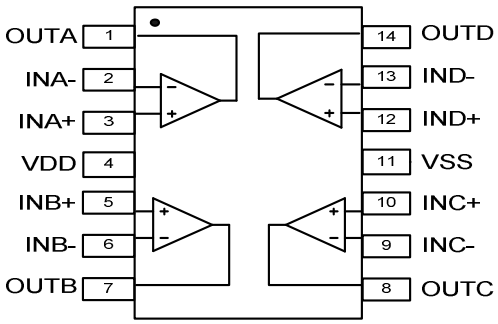

SOP-14
TSSOP-14

5.Absolute Maximum Ratings (T_A=25°C) Note1

Parameter	Symbol	Value	Unit
Supply Voltage	V_{CC}	7.5	V
Common-mode input Voltage	V_{ICR}	(-VS)-0.5~(+VS)0.5	V
Junction Temperature	T_J	150	°C
Operating Temperature Range	T_{OPR}	-40 to 125	°C
Lead Temperature (Soldering, 10 sec)	T_L	250	°C
Storage Temperature Range	T_{STG}	-50 to 150	°C

Note1: Exceeding the above limits may damage to the chip. The reliability of the device will also be affected if the device works under the limit conditions. Electrostatic discharge can also cause damage to chips, so it is suggested to take some preventive measures for integrated circuits. Failure to follow proper handling and installation can also cause damage. Precision LMV321 and other devices are more vulnerable to damage than ordinary devices in the case of tiny electrostatic, and small parameter changes may make the whole circuit performance substandard.

6.Electrical Characteristics

At R_L=100kΩ connected to Vs/2,and V_{OUT}=Vs/2,Ta=25°C) , unless otherwise noted

Parameter	Symbol	Conditions	Min	Typ	Max	Units
Input Offset Voltage	V_{OS}			0.8	7	mV
Input offset current	I_{OS}			10		nA
Input bias current	I_B			10		nA
Common-mode input voltage range	V_{CM}	V_S=5.5V		-0.1~5.6		V
Open-loop Gain	AOL	V_O=0.1V to 4.9V, R_L=5kΩ	70	80		dB
		V_O=0.035V to 4.96V, R_L=100kΩ	80	84		dB
Common Mode Rejection	CMRR	V_{CM}=-0.1V~4V, V_S=5.5V	62	70		dB
		V_{CM}=-0.1V~5.6V, V_S=5.5V	56	68		dB
Power Supply Rejection	PSRR	V_{CM}=(-V_S)+0.5 V, V_S=2.5V~5.5V	60	80		dB
Input offset voltage drift	$\Delta V_{OS}/\Delta T$			2.7		μV/°C
Input voltage swing	V_I	R_L=100kΩ		8		mV
		R_L=10kΩ		80		mV
Operating voltage range	V_W		2.1		5.5	V
Output Current	I_O		20	25		mA
Quiescent Current	I_Q	LMV321I		45	100	μA
		LMV358I (Two Amplifiers)		90	200	μA
		LMV324I (All Four Amplifiers)		180	400	μA
Slew Rate	SR	G=+1,2V Output Step		0.52		V/μs
Gain Bandwidth Product	GBP	C_L=100pF		1		MHz
Equivalent input Noise Voltage	eN	f=1KHz		27		nV/√Hz
		f=10KHz		20		

7.1Typical Characteristic

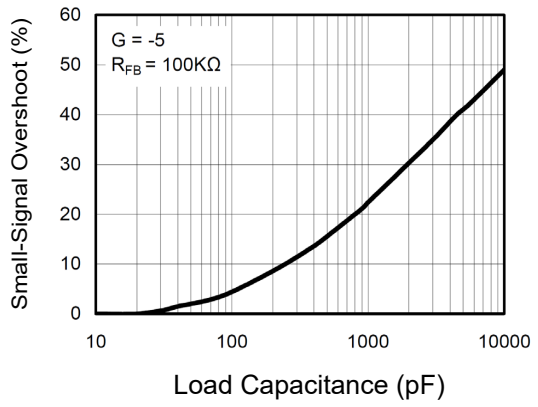

Figure 1: Small-Signal Overshoot vs. Load Capacitance

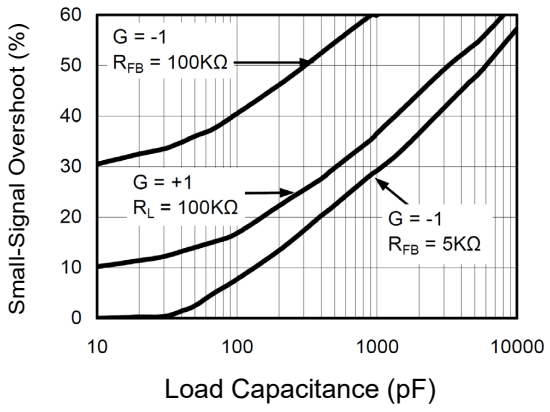

Figure 2: Small-Signal Overshoot vs. Load Capacitance

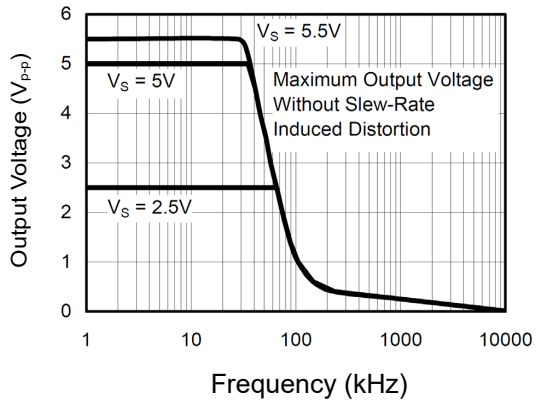

Figure 3: Maximum Output Voltage vs. Frequency

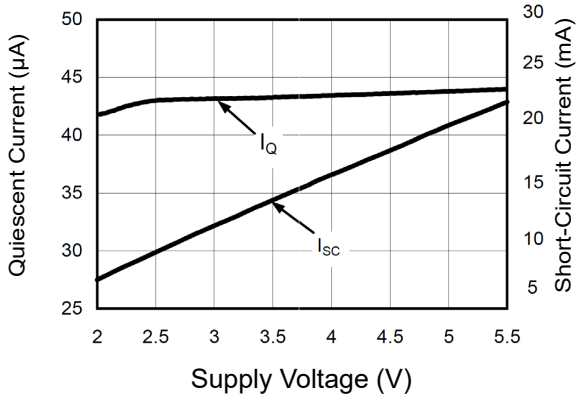

Figure 4: Quiescent and Short-Circuit Current vs. Supply Voltage

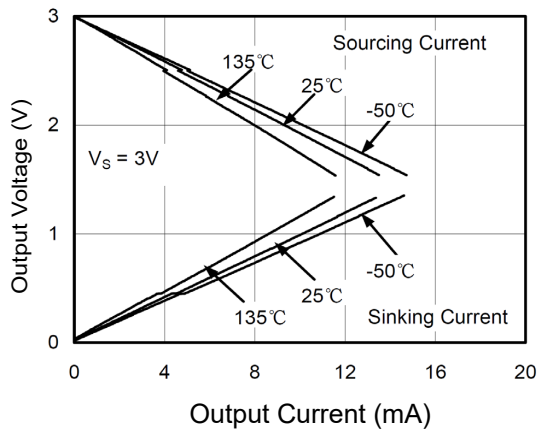

Figure 5: Output Voltage Swing vs. Output Current

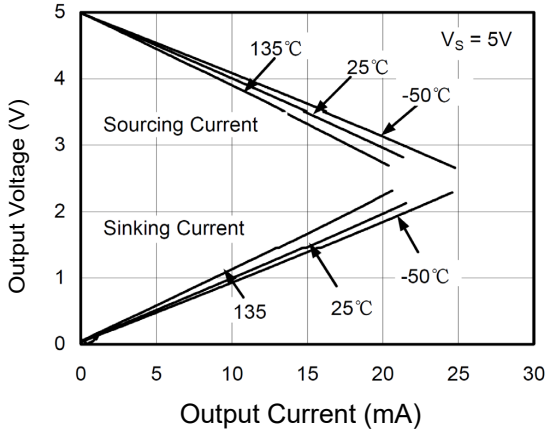

Figure 6: Output Voltage Swing vs. Output Current

7.2Typical Characteristic

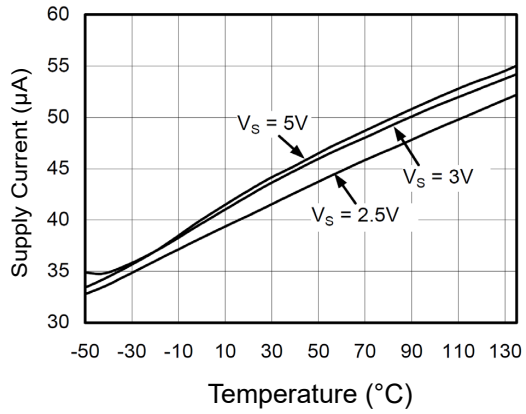

Figure 7: Supply Current vs. Temperature

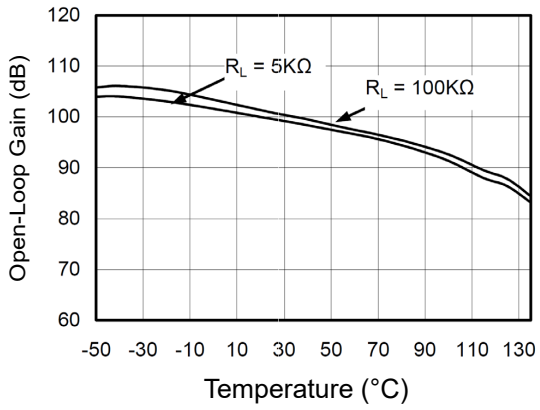

Figure 8: Open-Loop Gain vs. Temperature

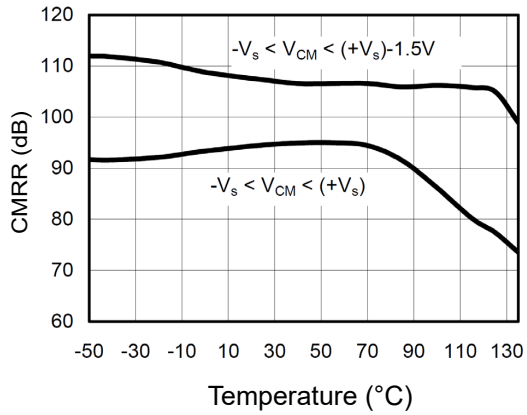

Figure 9: Common-Mode Rejection Ratio vs. Temperature

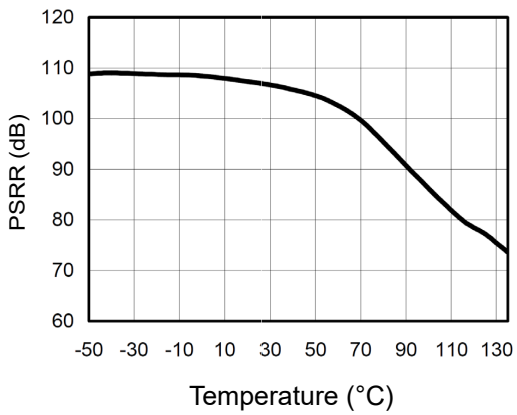

Figure 10: Power-Supply Rejection Ratio vs. Temperature

8.Typical Applications

1.differential amplifier

As shown in the figure, if the resistance is equal, (R4 / R3 = R2 / R1), then the output $V_{OUT}=(V_p-V_n)\times R2/R1+V_{REF}$

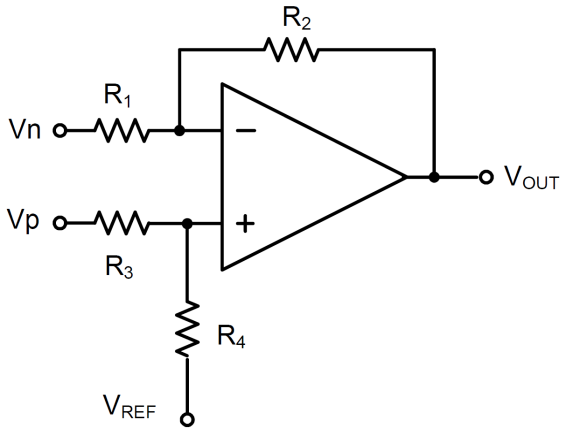

2.instrumentation amplifier

The circuit in the figure above performs the same function, but the input is high impedance.

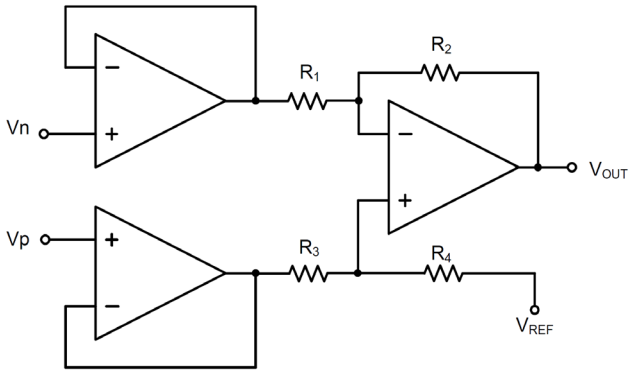

3.Low pass active filtering

The low-pass filter circuit shown here has a (-R2 / R1) DC gain and -3db at a frequency of 1/2 PI R2C corner. Make sure the filter is within the amplifier's bandwidth. Large feedback resistors are easily accompanied by parasitic capacitance at high speed, resulting in adverse effects such as oscillation. Keep the resistance value as low as possible and consider the appropriate output load.

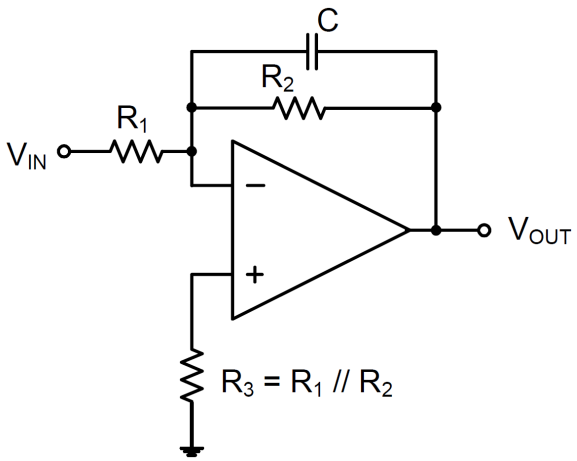

9.1 SC70-5 Package Outline Dimensions

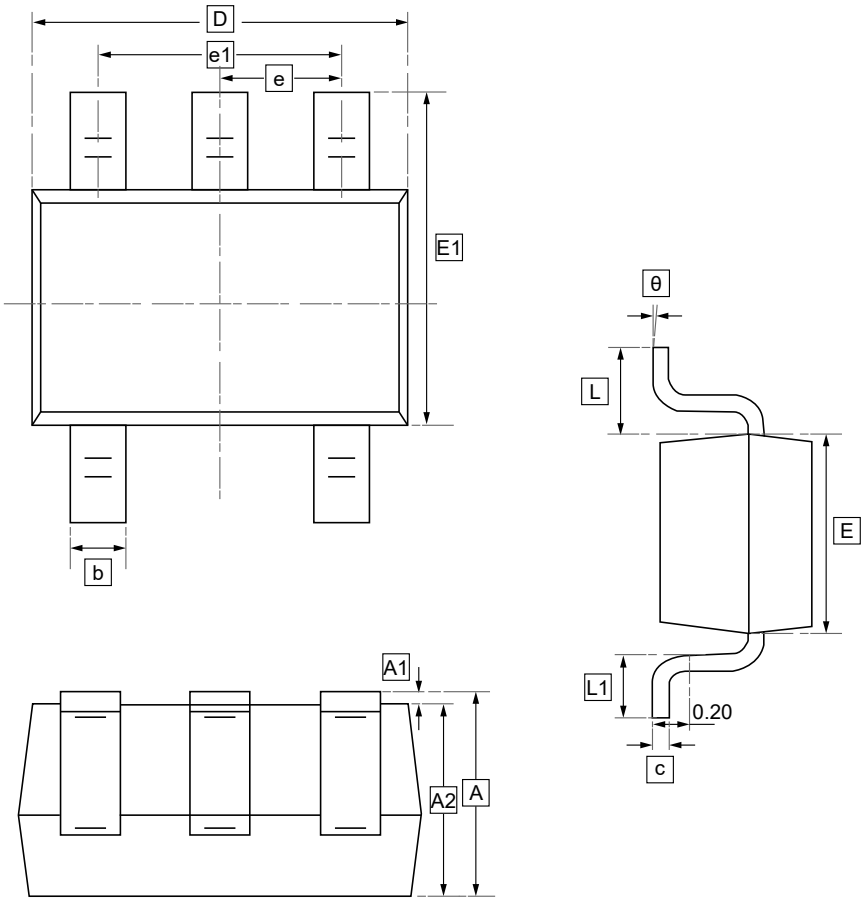

DIMENSIONS (mm are the original dimensions)

Symbol	A	A1	A2	b	c	D	E	E1	e	e1	L	θ
Min	0.90	0.00	0.90	0.15	0.08	2.05	1.15	2.15	0.65	1.20	0.26	7°
Max	1.10	0.10	1.00	0.35	0.15	2.25	1.35	2.45	TYP	1.40	0.46	REF.

9.2 SOT23-5 Package Outline Dimensions

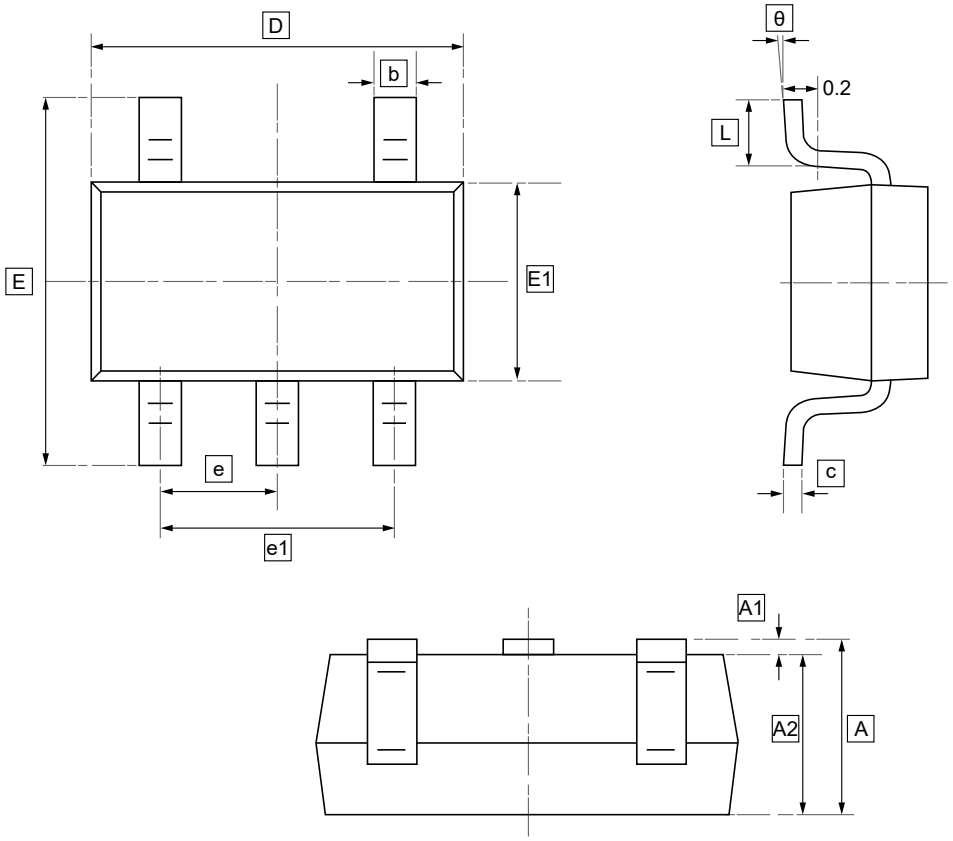

DIMENSIONS (mm are the original dimensions)

Symbol	A	A1	A2	b	c	D	E1	E	e	e1	L	θ
Min	1.050	0.000	1.050	0.300	0.100	2.820	1.500	2.650	0.950	1.800	0.300	0°
Max	1.250	0.100	1.150	0.500	0.200	3.020	1.700	2.950	BSC	2.000	0.600	8°

9.3 SOP-8 Package Outline Dimensions

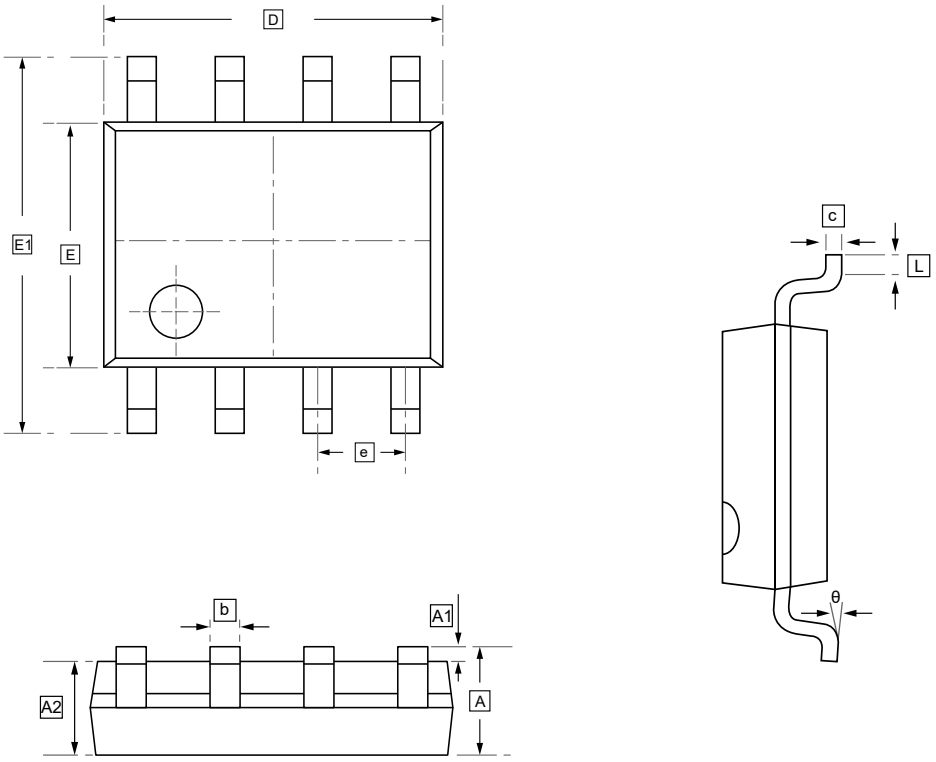

DIMENSIONS (mm are the original dimensions)

Symbol	A	A1	A2	b	c	D	E	E1	e	L	θ
Min	1.350	0.000	1.350	0.330	0.170	4.700	3.800	5.800	1.270	0.400	0°
Max	1.750	0.100	1.550	0.510	0.250	5.100	4.000	6.200	BSC	1.270	8°

9.4 TSSOP-8 Package Outline Dimensions

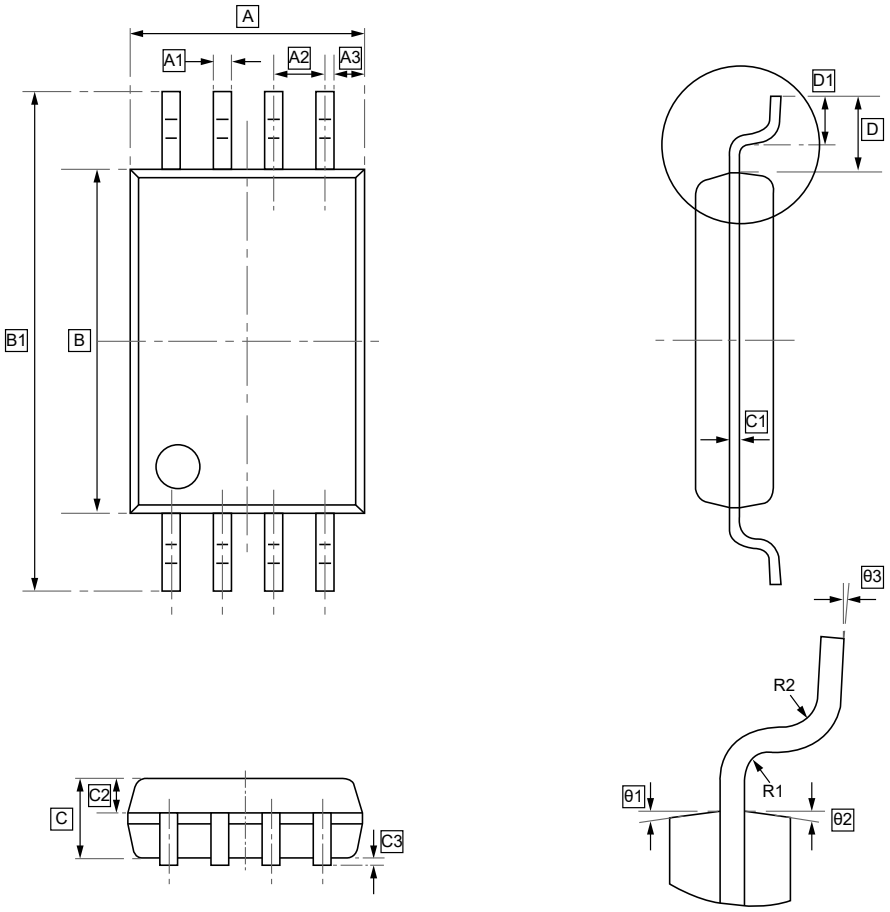

DIMENSIONS (mm are the original dimensions)

Symbol	A	A1	A2	A3	B	B1	C	C1	C2	C3	D	D1
Min	2.90	0.20	0.65	0.36	4.30	6.30	0.95	0.127	0.39	0.05	1.00	0.50
Max	3.10	0.30	TYP	0.46	4.50	6.50	1.05	TYP	0.49	0.15	REF	0.70

Symbol	R1	R2	θ1	θ2	θ3
Min	0.15	0.15	12°	12°	0°
Max	TYP	TYP	TYP4	TYP4	7°

9.5 TSSOP-14 Package Outline Dimensions

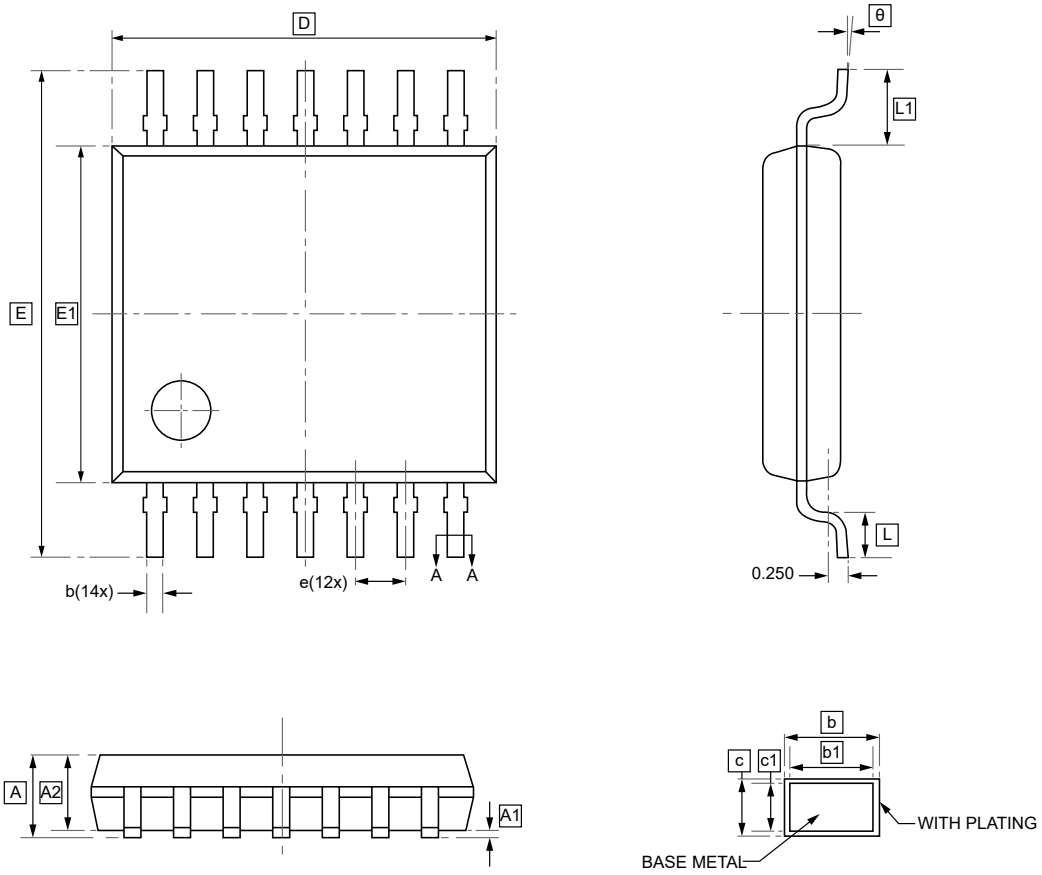

DIMENSIONS (mm are the original dimensions)

Symbol	A	A1	A2	b	b1	c	c1	D	E	E1	e	L1
Min	-	0.05	0.90	0.20	0.19	0.13	0.120	4.90	6.20	4.30	0.65	0.85
Max	1.20	0.15	1.05	0.28	0.25	0.17	0.14	5.10	6.60	4.50	BSC	1.15

Symbol	L	θ
Min	0.45	0°
Max	0.75	8°

9.6 SOP-14 Package Outline Dimensions

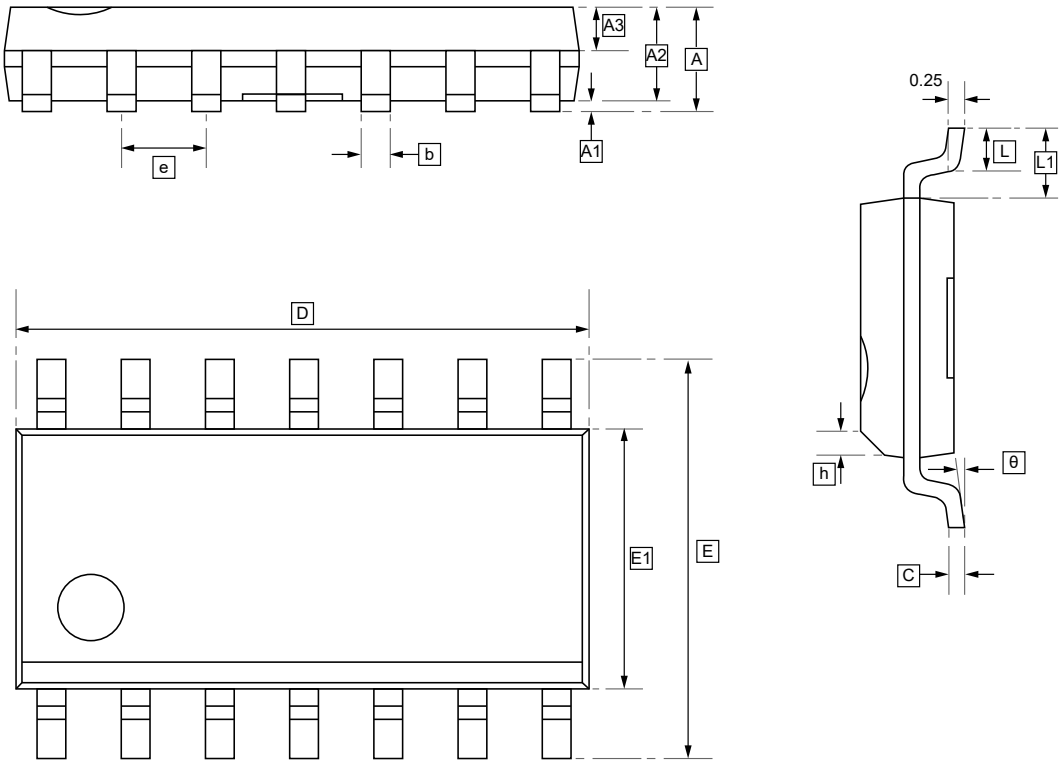

DIMENSIONS (mm are the original dimensions)

Symbol	A	A1	A2	A3	b	C	D	E	E1	e	h	L
Min	-	0.05	1.35	0.65	0.203	0.17	8.45	5.80	3.80	1.24	0.25	0.40
Max	1.75	0.25	1.55	0.75	0.305	0.25	8.85	6.20	4.00	1.30	0.50	0.80

Symbol	L1	θ
Min	1.00	0°
Max	1.10	8°

10.Ordering information

SOT23-5

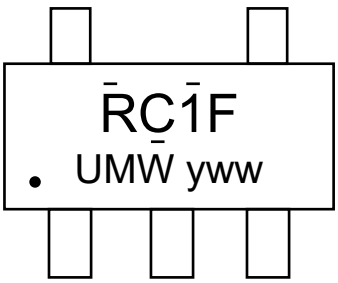

SC70-5

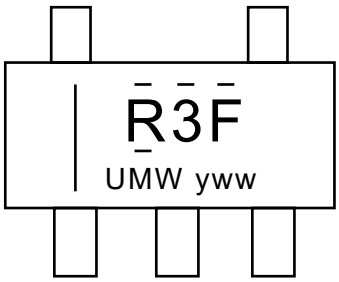

SOP-14



TSSOP-8

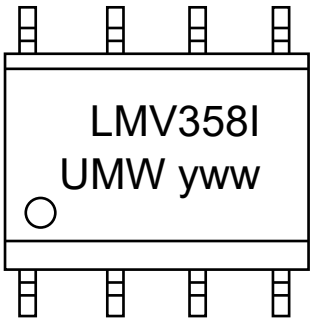

SOP-8

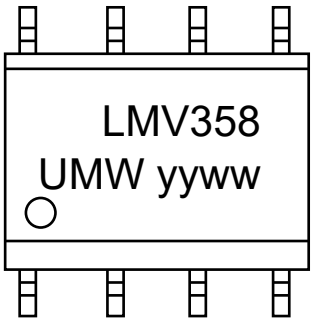

y: Year Code
yy: Year Code
ww: Week Code

Order Code	Marking	Package	Base QTY	Delivery Mode
UMW LMV321IDBVR	RC1F	SOT23-5	3000	Tape and reel
UMW LMV321IDCKR	R3F	SC70-5	3000	Tape and reel
UMW LMV324IDR	LMV324	SOP-14	2500	Tape and reel
UMW LMV324IPWR	LMV324	TSSOP-14	4000	Tape and reel
UMW LMV324IPWRG4	LMV324	TSSOP-14	4000	Tape and reel
UMW LMV358IDR	LMV358	SOP-8	2500	Tape and reel
UMW LMV358IPWR	LMV358I	TSSOP-8	5000	Tape and reel

11.Disclaimer

UMW reserves the right to make changes to all products, specifications. Customers should obtain the latest version of product documentation and verify the completeness and currency of the information before placing an order.

When applying our products, please do not exceed the maximum rated values, as this may affect the reliability of the entire system. Under certain conditions, any semiconductor product may experience faults or failures. Buyers are responsible for adhering to safety standards and implementing safety measures during system design, prototyping, and manufacturing when using our products to prevent potential failure risks that could lead to personal injury or property damage.

Unless explicitly stated in writing, UMW products are not intended for use in medical, life-saving, or life-sustaining applications, nor for any other applications where product failure could result in personal injury or death. If customers use or sell the product for such applications without explicit authorization, they assume all associated risks.

When reselling, applying, or exporting, please comply with export control laws and regulations of China, the United States, the United Kingdom, the European Union, and other relevant countries, regions, and international organizations.

This document and any actions by UMW do not grant any intellectual property rights, whether express or implied, by estoppel or otherwise. The product names and marks mentioned herein may be trademarks of their respective owners.