HGB210N20S , HGK210N20S HGP210N20S

P-1

200V N-Ch Power MOSFET

Feature

◇ High Speed Power Smooth Switching
◇ Enhanced Body diode dv/dt capability
◇ Enhanced Avalanche Ruggedness
◇ 100% UIS Tested, 100% Rg Tested
◇ Lead Free

V_{DS}	200	V
$R_{DS(on),typ}$	16	mΩ
$I_{D\ (Sillicon\ Limited)}$	70	A

Application

◇ Synchronous Rectification in SMPS
◇ Hard Switching and High Speed Circuit
◇ Power Tools
◇ UPS
◇ Motor Control

TO-263

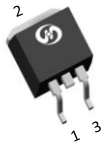

TO-220



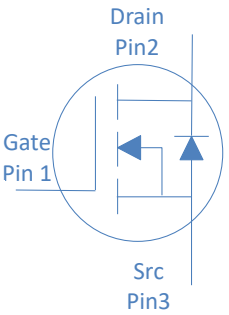

TO-247



Part Number	Package	Marking
HGB210N20S	TO-263	GB210N20S
HGK210N20S	TO-247	GK210N20S
HGP210N20S	TO-220	GP210N20S

Absolute Maximum Ratings at T_j=25℃ (unless otherwise specified)

Parameter	Symbol	Conditions	Value	Unit
Continuous Drain Current (Silicon Limited)	I_D	T_C=25℃	70	A
		T_C=100℃	50	
Drain to Source Voltage	V_{DS}	-	200	V
Gate to Source Voltage	V_{GS}	-	±20	V
Pulsed Drain Current	I_{DM}	-	260	A
Avalanche Energy, Single Pulse	E_{AS}	L=0.4mH, T_C=25℃	320	mJ
Power Dissipation	P_D	T_C=25℃	300	W
Operating and Storage Temperature	T_J, T_{stg}	-	-55 to175	℃

Absolute Maximum Ratings

Parameter	Symbol	Max	Unit
Thermal Resistance Junction-Case	$R_{\Theta JC}$	0.5	℃/W
Thermal Resistance Junction-Ambient	$R_{\Theta JA}$	60	℃/W

Electrical Characteristics at T_j=25℃ (unless otherwise specified)

Static Characteristics

Parameter	Symbol	Conditions		Value			Unit
				min	typ	max	
Drain to Source Breakdown Voltage	$V_{(BR)DSS}$	V_{GS}=0V, I_D=250μA		200	-	-	V
Gate Threshold Voltage	$V_{GS(th)}$	V_{GS}=V_{DS}, I_D=250μA		2	3	4	
Zero Gate Voltage Drain Current	I_{DSS}	V_{GS}=0V, V_{DS}=200V, T_j=25℃		-	-	1	μA
		V_{GS}=0V, V_{DS}=200V, T_j=100℃		-	-	100	
Gate to Source Leakage Current	I_{GSS}	V_{GS}=±20V, V_{DS}=0V		-	-	±100	nA
Drain to Source on Resistance	$R_{DS(on)}$	V_{GS}=10V, I_D=20A	TO-263	-	16	21	mΩ
			TO-247		16	21	
			TO-220	-	16	21	
Transconductance	g_{fs}	V_{DS}=5V, I_D=20A		-	60	-	S
Gate Resistance	R_G	V_{GS}=0V, V_{DS} Open, f=1MHz		-	4.4	-	Ω

Dynamic Characteristics

Input Capacitance	C_{iss}	V_{GS}=0V, V_{DS}=100V, f=1MHz	-	2816	-	pF
Output Capacitance	C_{oss}		-	230	-	
Reverse Transfer Capacitance	C_{rss}		-	11	-	
Total Gate Charge	Q_g	V_{DD}=100V, I_D=20A, V_{GS}=10V	-	35	-	nC
Gate to Source Charge	Q_{gs}		-	11	-	
Gate to Drain (Miller) Charge	Q_{gd}		-	6	-	
Turn on Delay Time	$t_{d(on)}$	V_{DD}=100V, I_D=20A, V_{GS}=10V, R_G=10Ω,	-	10	-	ns
Rise time	t_r		-	20	-	
Turn off Delay Time	$t_{d(off)}$		-	21	-	
Fall Time	t_f		-	8	-	

Reverse Diode Characteristics

Diode Forward Voltage	V_{SD}	V_{GS}=0V, I_F=20A	-	0.9	-	V
Reverse Recovery Time	t_{rr}	V_R=100V, I_F=20A, dI_F/dt=100A/μs	-	120	-	ns
Reverse Recovery Charge	Q_{rr}		-	420	-	nC

Fig 1. Typical Output Characteristics

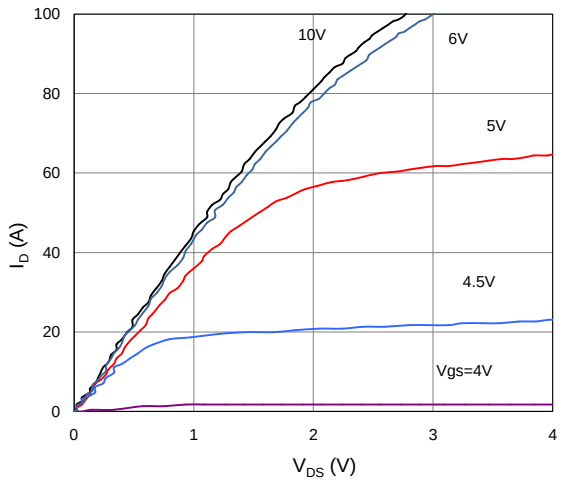

Figure 2. On-Resistance vs. Gate-Source Voltage

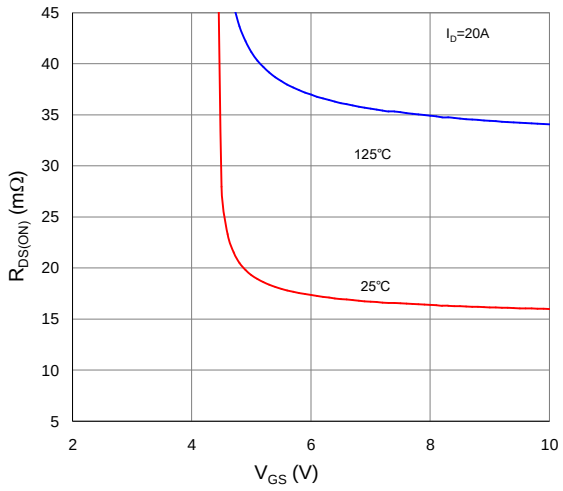

Figure 3. On-Resistance vs. Drain Current and Gate Voltage

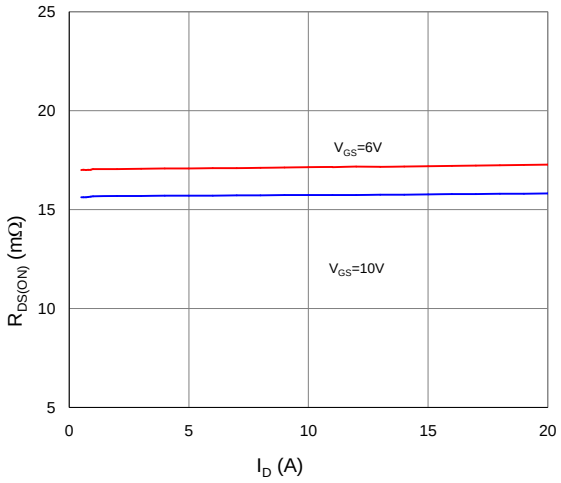

Figure 4. Normalized On-Resistance vs. Junction Temperature

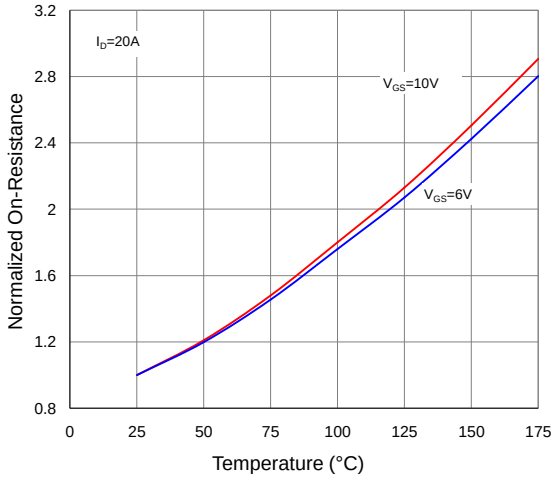

Figure 5. Typical Transfer Characteristics

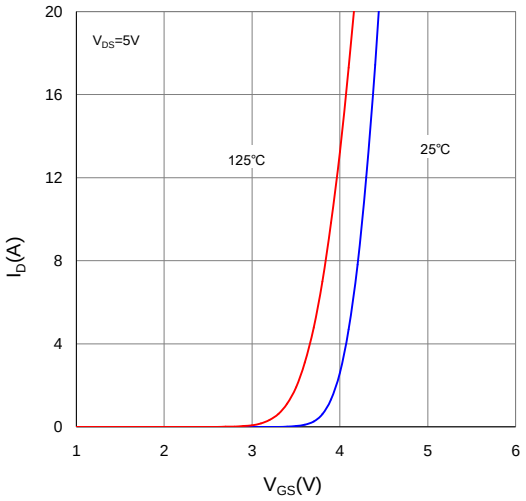

Figure 6. Typical Source-Drain Diode Forward Voltage

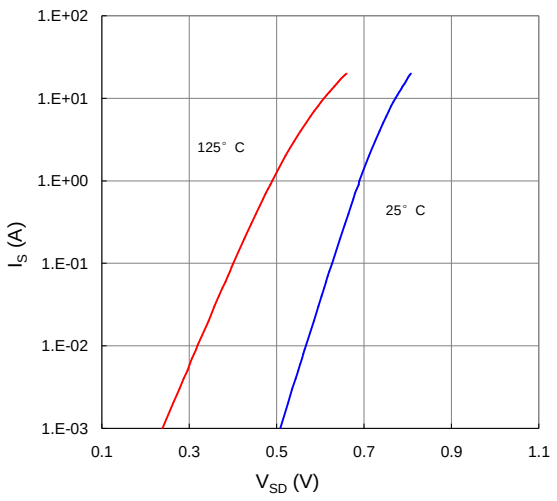

Figure 7. Typical Gate-Charge vs. Gate-to-Source Voltage

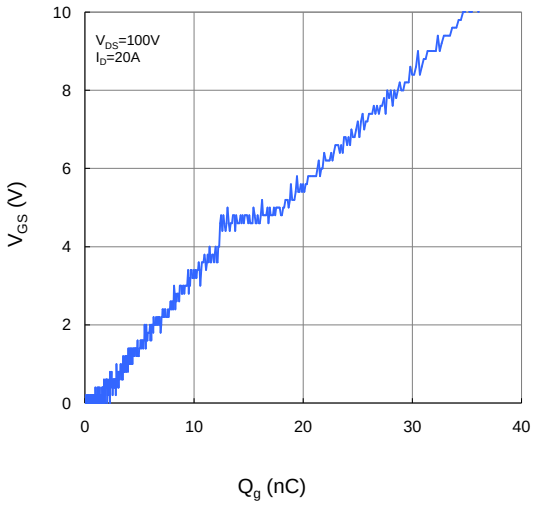

Figure 8. Typical Capacitance vs. Drain-to-Source Voltage

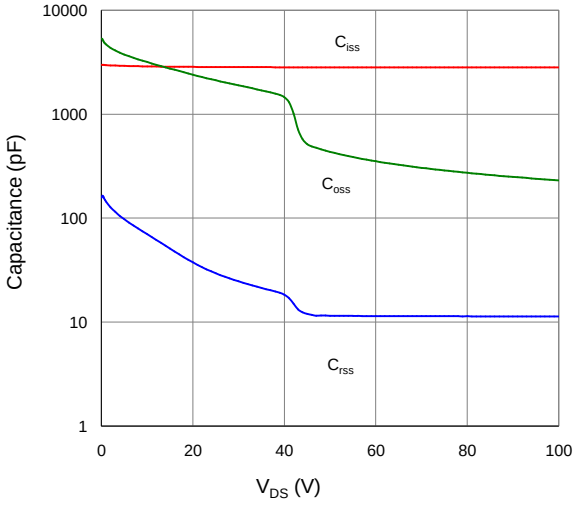

Figure 9. Maximum Safe Operating Area

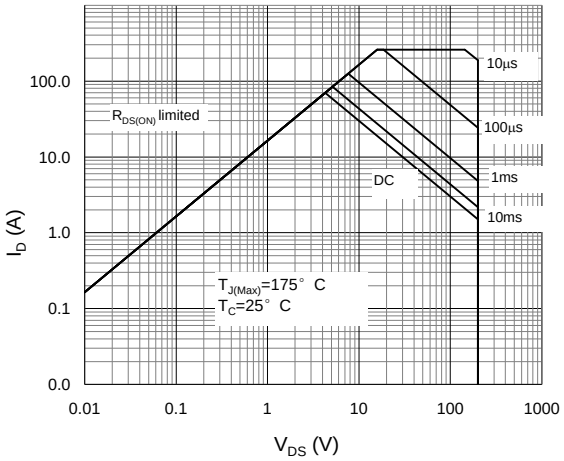

Figure 10. Maximun Drain Current vs. Case Temperature

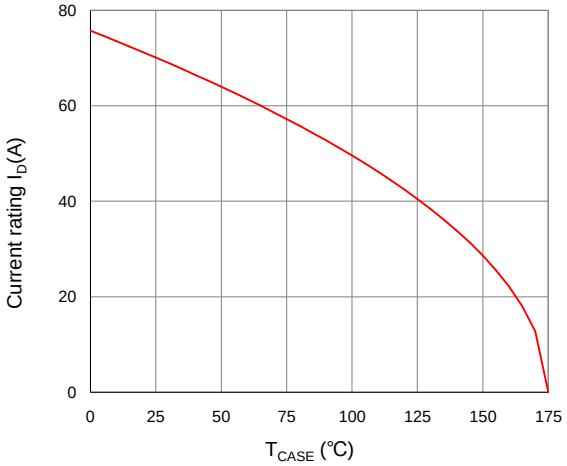

Figure 11. Normalized Maximum Transient Thermal Impedance, Junction-to-Case

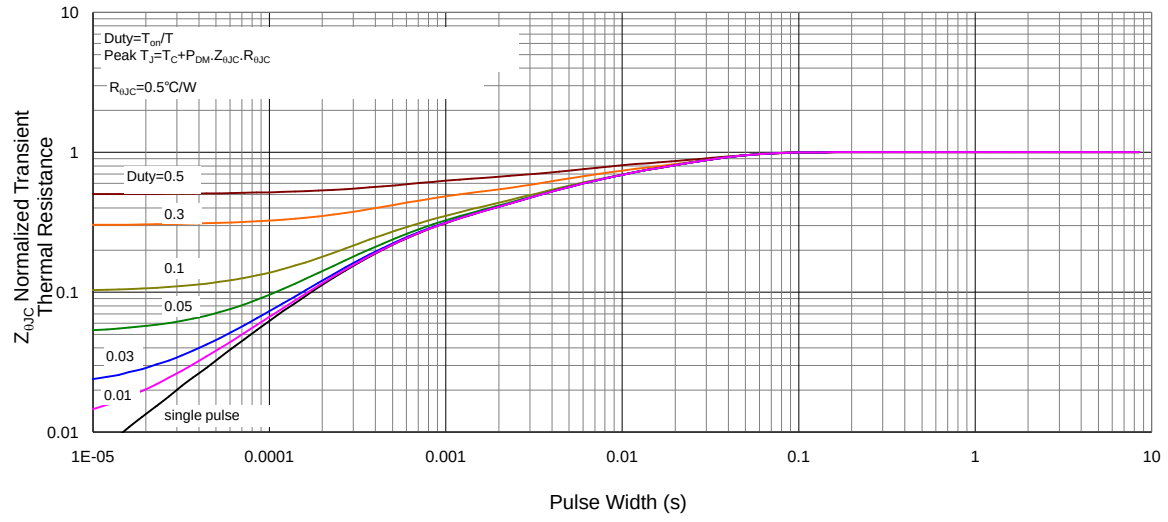

Inductive switching Test

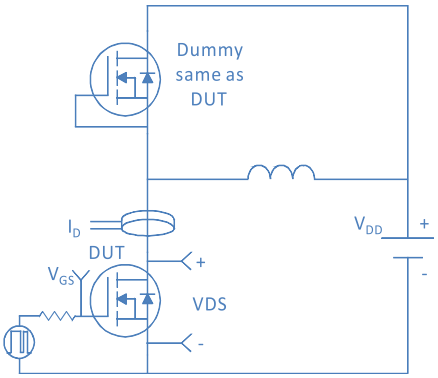

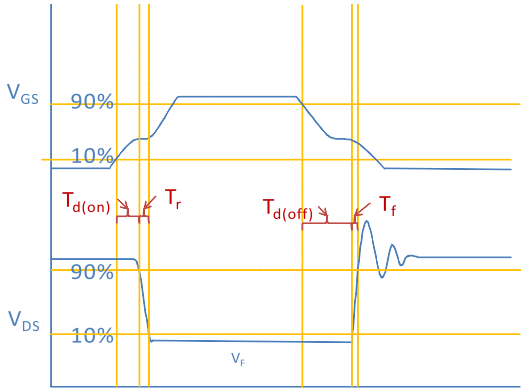

Gate Charge Test

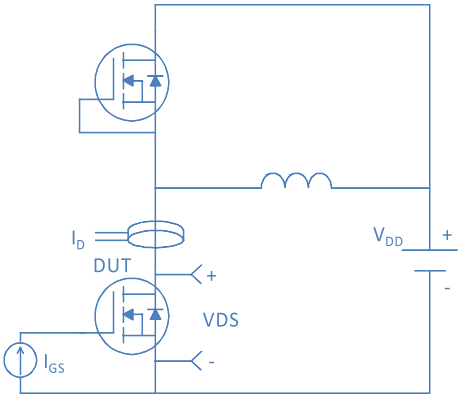

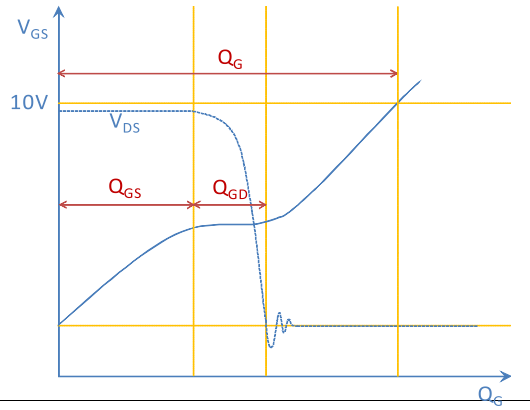

Uclamped Inductive Switching (UIS) Test

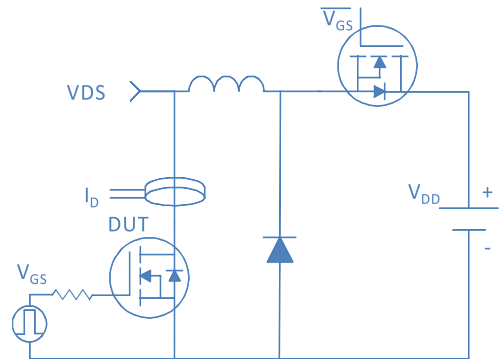

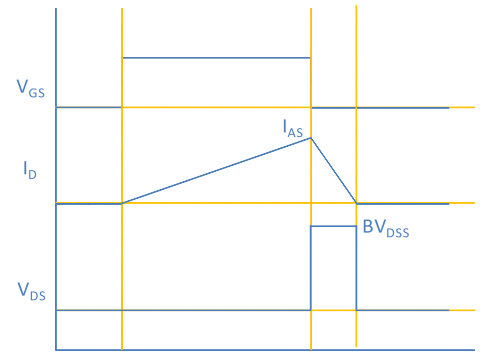

Diode Recovery Test

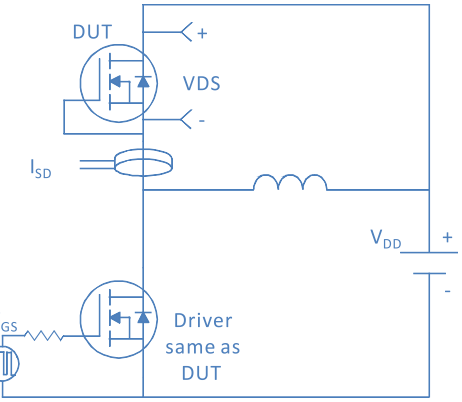

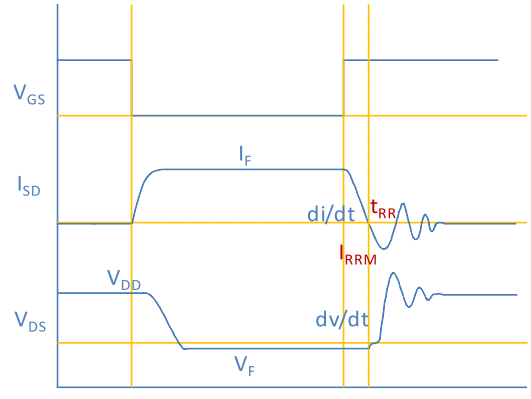

TO-220, 3 leads

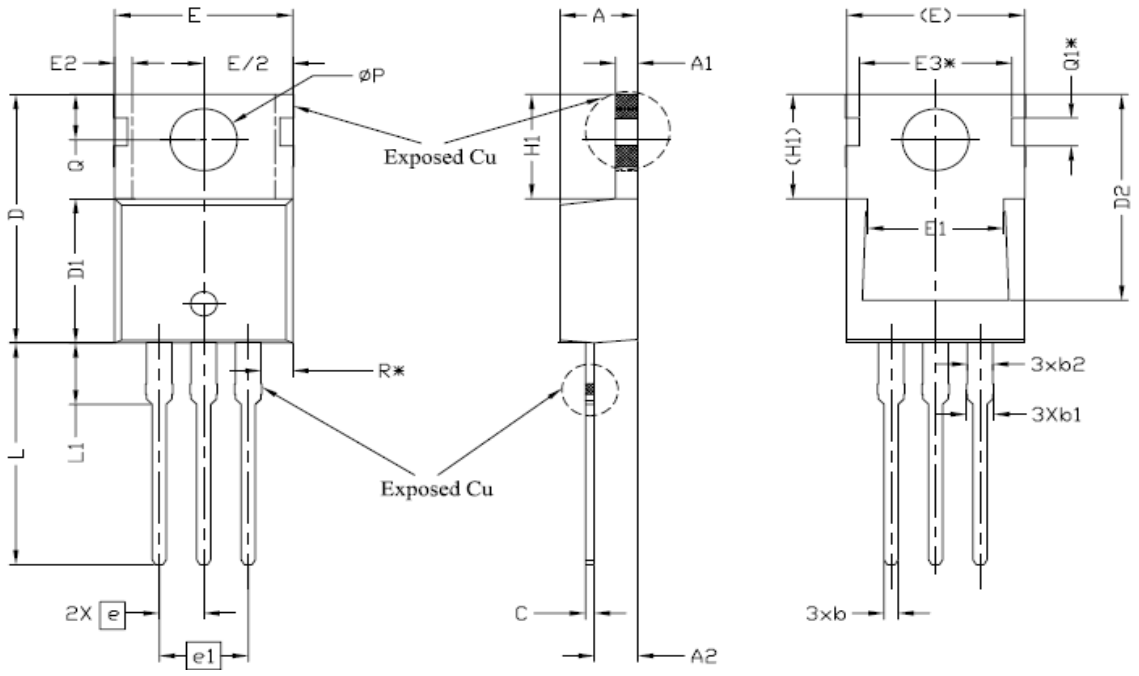

SYMBOL	DIMENSIONS			NOTES
	MIN.	NOM.	MAX.	
A	4.24	4.44	4.64	
A1	1.15	1.27	1.40	
A2	2.30	2.48	2.70	
b	0.70	0.80	0.90	
b1	1.20	1.55	1.75	
b2	1.20	1.45	1.70	
c	0.40	0.50	0.60	
D	14.70	15.37	16.00	4
D1	8.82	8.92	9.02	
D2	12.63	12.73	12.83	5
E	9.96	10.16	10.36	4,5
E1	6.86	7.77	8.89	5
E2	-	-	0.76	6
E3*	8.70REF.			
e	2.54BSC			
e1	5.08BSC			
H1	6.30	6.45	6.60	5,6
L	13.47	13.72	13.97	
L1	3.60	3.80	4.00	
øP	3.75	3.84	3.93	
Q	2.60	2.80	3.00	
Q1*	1.73REF.			
R*	1.82REF.			

TO-263, 2 leads

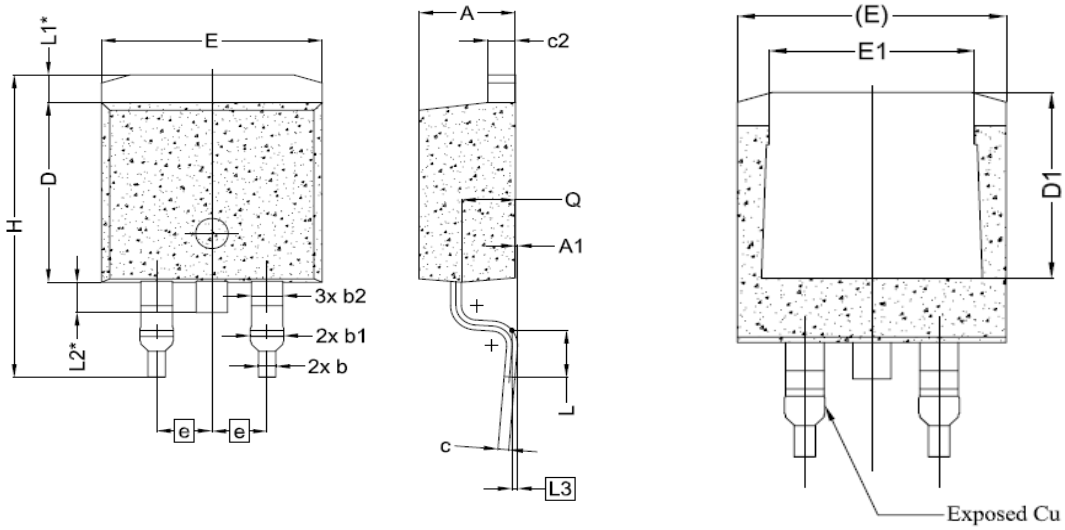

SYMBOL	DIMENSIONS		
	MIN.	NOM.	MAX.
A	4.24	4.44	4.64
A1	0.00	0.10	0.25
b	0.70	0.80	0.90
b1	1.20	1.55	1.75
b2	1.20	1.45	1.70
c	0.40	0.50	0.60
c2	1.15	1.27	1.40
D	8.82	8.92	9.02
D1	6.86	7.65	—
E	9.96	10.16	10.36
E1	6.89	7.77	7.89
e	2.54 BSC		
H	14.61	15.00	15.88
L	1.78	2.32	2.79
L1	1.36 REF.		
L2	1.50 REF.		
L3	0.25 BSC		
Q	2.30	2.48	2.70

TO-247, 3 leads (option 1)

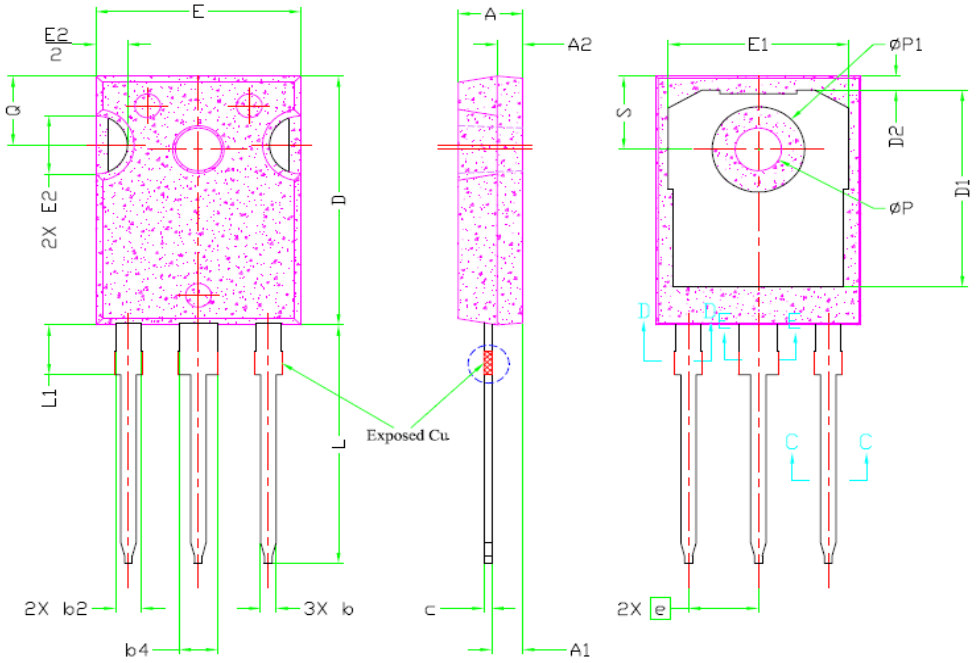

SYMBOL	DIMENSIONS			NOTES
	MIN.	NOM.	MAX.	
A	4.83	5.02	5.21	
A1	2.29	2.41	2.55	
A2	1.50	2.00	2.49	
b	1.12	1.20	1.33	
b1	1.12	1.20	1.28	
b2	1.91	2.00	2.39	6
b3	1.91	2.00	2.34	
b4	2.87	3.00	3.22	6, 8
b5	2.87	3.00	3.18	
c	0.55	0.60	0.69	6
c1	0.55	0.60	0.65	
D	20.80	20.95	21.10	4
D1	16.25	16.55	17.65	5
D2	0.51	1.19	1.35	
E	15.75	15.94	16.13	4
E1	13.46	14.02	14.16	5
E2	4.32	4.91	5.49	3
e	5.44BSC			
L	19.81	20.07	20.32	
L1	4.10	4.19	4.40	6
ØP	3.56	3.61	3.65	7
ØP1	7.19REF.			
Q	5.39	5.79	6.20	
S	6.04	6.17	6.30	

TO-247, 3 leads (option 2)

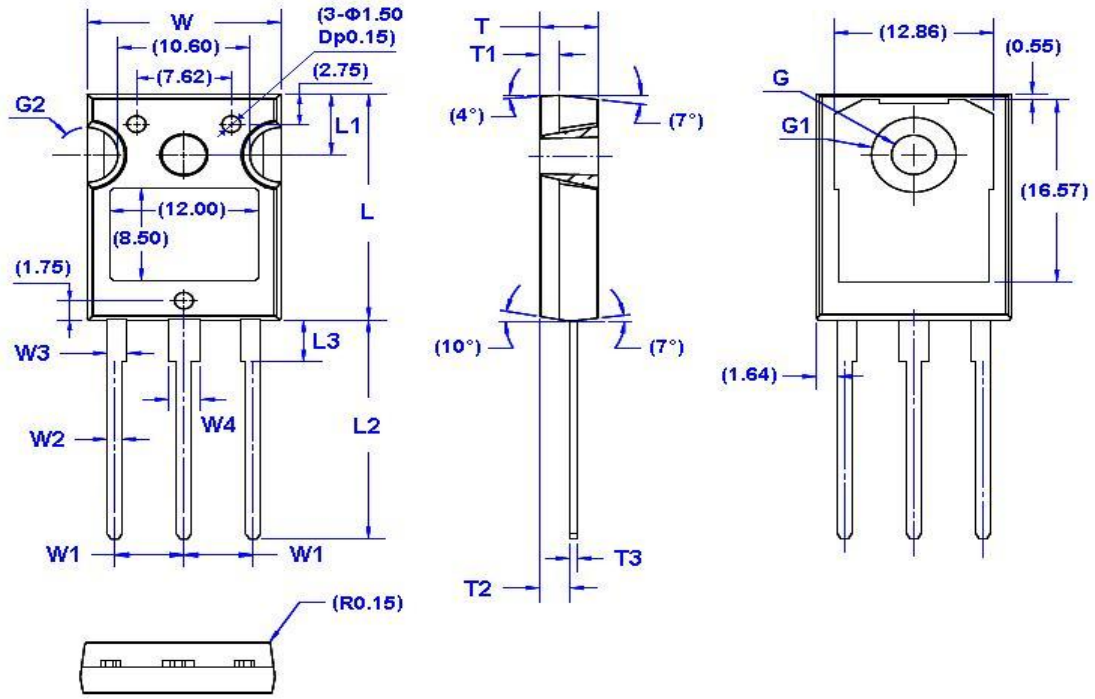

（单位: mm）

符号	尺寸		符号	尺寸		符号	尺寸		符号	尺寸	
	Min	Max		Min	Max		Min	Max		Min	Max
W	15.40	15.80	W4	2.44	2.64	L3	3.69	3.93	T3	0.51	0.69
W1	5.56 (TYP)		L	20.40	20.80	T	4.60	4.80	G(Φ)	3.51	3.65
W2	1.17	1.35	L1	5.36	5.56	T1	1.40	1.60	G1(Φ)	6.61	6.85
W3	1.55	1.75	L2	19.80	20.20	T2	2.30	2.50	G2(Φ)	4.96	5.20