AT1117 Series

Description

The AT1117 Series is a series of low dropout three-terminal regulators with a dropout of 1.3V at 1A load current.AT1117 Series features a very low standby current 1.8mA compared to 5mA of competitor.

Other than a fixed version, Vout = 1.2V, 1.8V, 2.5V, 2.85V, 3.3V, and 5V, AT1117 Series has an adjustable version, which can provide an output voltage from 1.25 to 12V with only two external resistors.

AT1117 Series offers thermal shut down function, to assure the stability of chip and power system. And it uses trimming technique to guarantee output voltage accuracy within 2%. Other output voltage accuracy can be customized on demand, such as 1%.

AT1117 Series is available in SOT-89-3L,SOT-223,TO-252 power package.

Features

- Maximum output current is 1.1A(SOT-89-3L)
- Maximum output current is 1.4A(SOT-223,TO-252)
- Range of operation input voltage: Max 30V
- Line regulation: 0.03%/V (typ.)
- Standby current: 1.8mA (SOT-89-3L,typ.)
- Standby current: 2mA (SOT-223,TO-252,typ.)
- Load regulation: 0.2%/A (typ.)
- Environment Temperature: -20°C~85°C

Applications

- Power Management for Computer Mother Board, Graphic Card
- LCD Monitor and LCD TV
- DVD Decode Board
- ADSL Modem
- Post Regulators For Switching Supplies

Pin Assignment

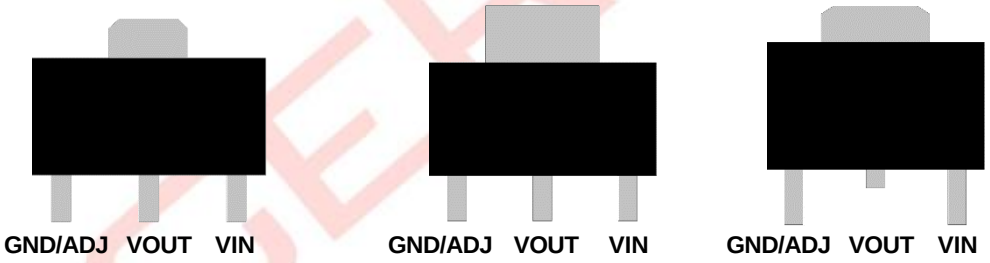

SOT-89-3L	SOT-223	TO-252
AT1117SQ	**AT1117SR**	**AT1117SF**

Typical Application

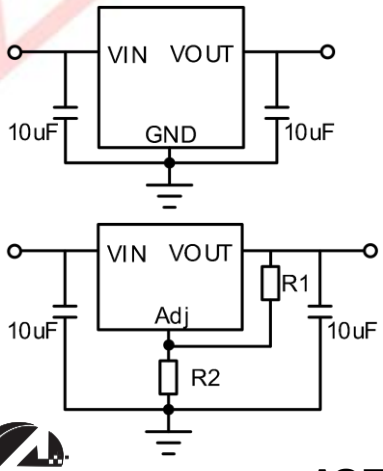

Absolute Maximum Ratings(Note)

Symbol	Items		Value	Unit
V_{IN}	Input Voltage		~30	V
I_{OUT}	Output Current		1000	mA
P_{DMAX}	Power Dissipation	SOT-89-3L	0.5	W
$R_{\theta JA}$	Thermal Resistance Junction to Ambient	SOT-89-3L	200	℃/W
		SOT-223	20	
		TO-252	10	
$R_{\theta Jc}$	Thermal Resistance Junction to Case	SOT-89-3L	75	℃/W
		SOT-223	15	
		TO-252	10	
T_J	Junction Temperature		-40~150	℃
T_A	Ambient Temperature		-40~85	℃
T_{STG}	Storage Temperature		-40~150	℃
T_{SOLDER}	Package Lead Soldering Temperature(10s)		260	℃

Note: *Exceed these limits to damage to the device. Exposure to absolute maximum rating conditions may affect device reliability.*

Recommanded Operating Range

Symbol	Items	Value	Unit
V_{IN}	Supply Voltage	~15	V
T_{OPT}	Operating Temperature	-40 to +85	℃

AGERTECH

Electrical Characteristics (TA=25℃, unless otherwise noted)

Symbol	Parameter	Conditions	Min.	Typ.	Max.	Unit
Vref	Reference voltage	AT1117VAD 10mA≤Iout≤1A , Vin=3.25V	1.225	1.25	1.275	V
Vout	Output voltage	AT1117V12 0≤Iout≤1A , Vin=3.2V	1.176	1.2	1.224	V
		AT1117V18 0≤Iout≤1A , Vin=3.8V	1.764	1.8	1.836	V
		AT1117V25 0≤Iout≤1A , Vin=4.5V	2.45	2.5	2.55	V
		AT1117V285 0≤Iout≤1A , Vin=4.85V	2.793	2.85	2.907	V
		AT1117V33 0≤Iout≤1A , Vin=5.3V	3.234	3.3	3.366	V
		AT1117V50 0≤Iout≤1A , Vin=7.0V	4.9	5	5.1	V
△Vout	Line regulation	AT1117V12 Iout=10mA, 2.7V≤Vin≤10V		0.03	0.2	%/V
		AT1117VAD Iout=10mA, 2.75V≤Vin≤12V		0.03	0.2	%/V
		AT1117V18 Iout=10mA, 3.3V≤Vin≤12V		0.03	0.2	%/V
		AT1117V25 Iout=10mA, 4.0V≤Vin≤12V		0.03	0.2	%/V
		AT1117V285 Iout=10mA, 4.35V≤Vin≤12V		0.03	0.2	%/V
		AT1117V33 Iout=10mA, 4.8V≤Vin≤12V		0.03	0.2	%/V
		AT1117V50 Iout=10mA, 6.5V≤Vin≤12V		0.03	0.2	%/V
△Vout	Load regulation	AT1117V12 Vin =2.7V, 10mA≤Iout≤1A		2	8	mV
		AT1117VAD Vin =2.75V, 10mA≤Iout≤1A		2	8	mV
		AT1117V18 Vin =3.3V, 10mA≤Iout≤1A		3	12	mV
		AT1117V25 Vin =4.0V, 10mA≤Iout≤1A		4	16	mV
		AT1117V285 Vin =4.35V, 10mA≤Iout≤1A		5	20	mV
		AT1117V33 Vin =4.8V, 10mA≤Iout≤1A		6	24	mV
		AT1117V50 Vin =6.5V, 10mA≤Iout≤1A		9	36	mV
Vdrop	Dropout voltage	Iout =100mA		1.15	1.3	V

Vdrop	Dropout voltage	Iout=1A		1.3	1.5	V
Imin	Minimum load current	AT1117VAD		1.8	10	mA
Iq	Quiescent Current	AT1117V**,Vin=10V(SOT-89-3L)		1.8	5	mA
		AT1117V**,Vin=10V(SOT-223,TO-252)		2	5	mA
IAdj	Adjust pin current	AT1117VAD Vin=5V,10mA≤Iout≤1A		55	120	uA
Ichange	Iadj change	AT1117VAD Vin=5V,10mA≤Iout≤1A		0.2	10	uA
ΔV/ΔT	Temperature coefficien			±100		ppm

AGERTECH

Typical Performance Characteristics(T_A=25℃， unless otherwise noted.)

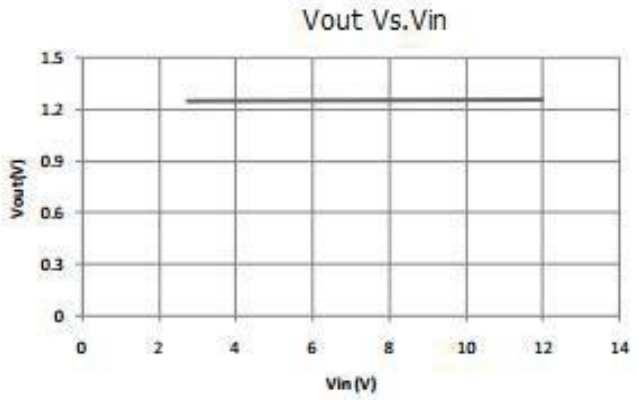

Line regulation

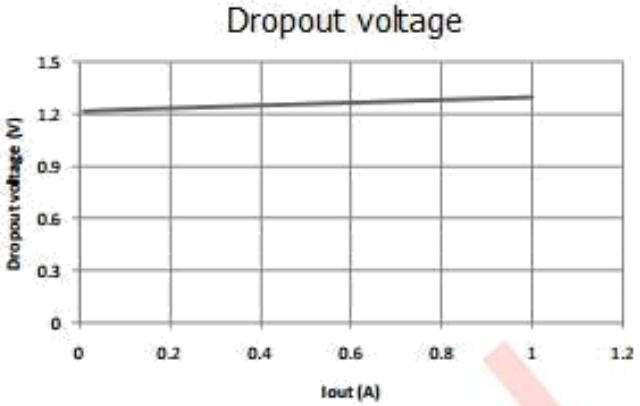

Dropout voltage

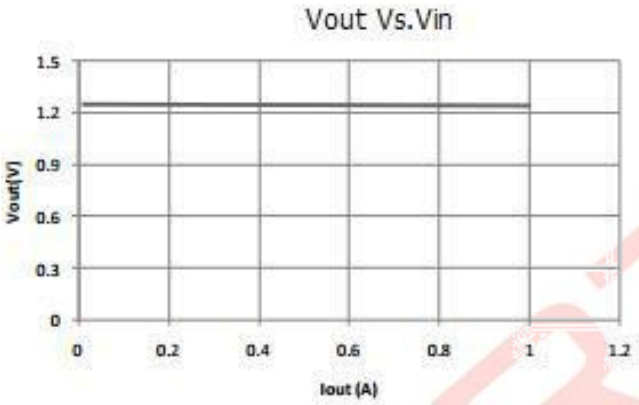

Load regulation

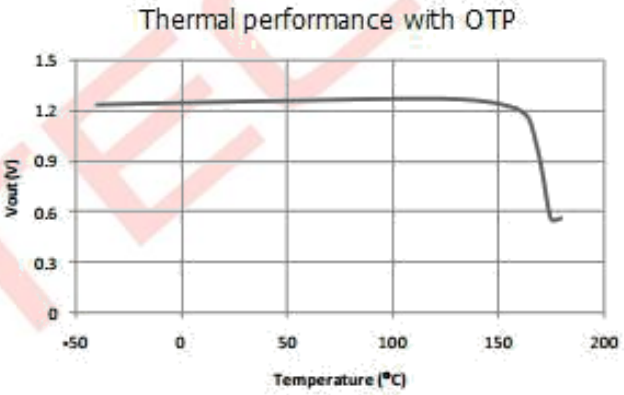

Thermal performance with OTP

ACERTECH

Package Outline

SOT-89-3L

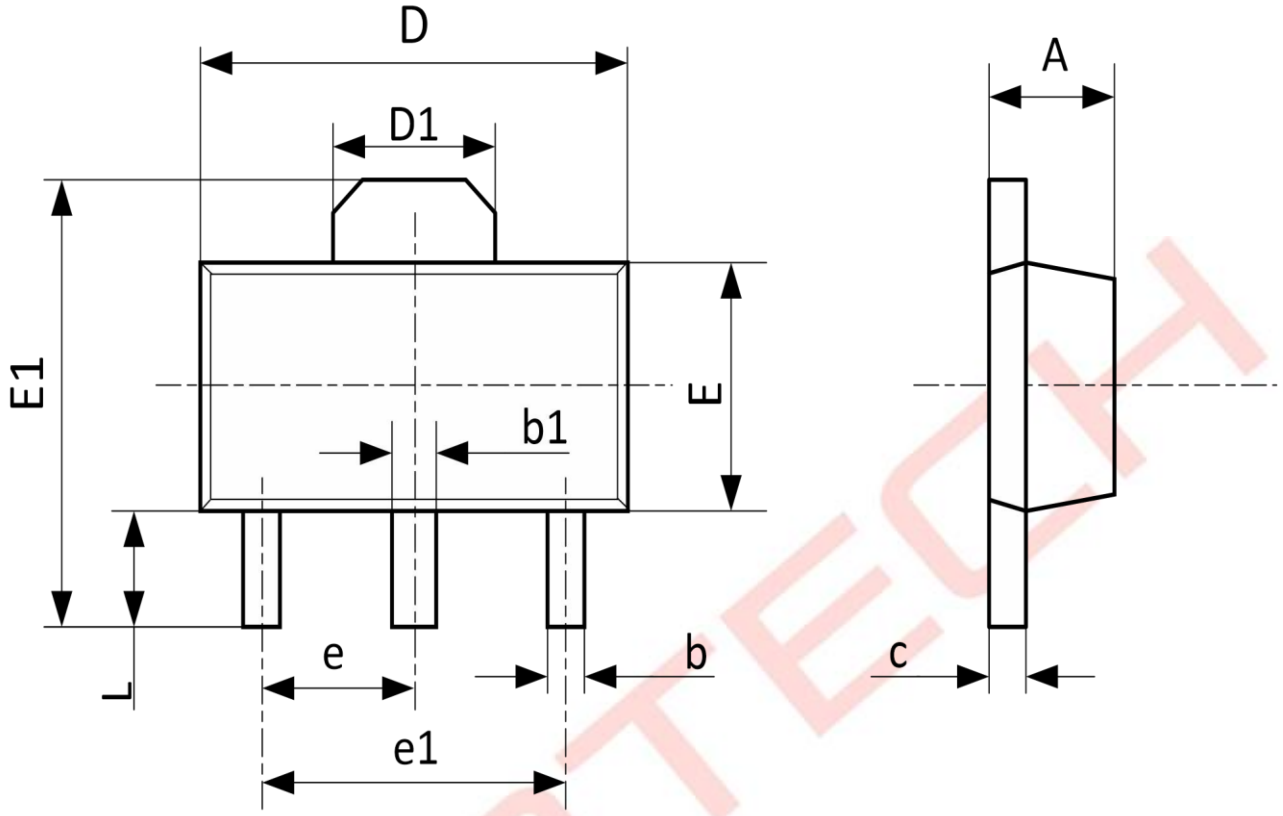

Symbol	Dimensions In Millimeters		Dimensions In Inches	
	Min	Max	Min	Max
A	1.400	1.600	0.055	0.063
b	0.320	0.520	0.013	0.020
b1	0.400	0.580	0.016	0.023
c	0.350	0.440	0.014	0.017
D	4.400	4.600	0.173	0.181
D1	1.550 REF		0.061 REF	
E	2.300	2.600	0.091	0.102
E1	3.940	4.250	0.155	0.167
e	1.500 TYP		0.060 TYP	
e1	3.000 TYP		0.118 TYP	
L	0.900	1.200	0.035	0.047

Package Outline

SOT-223

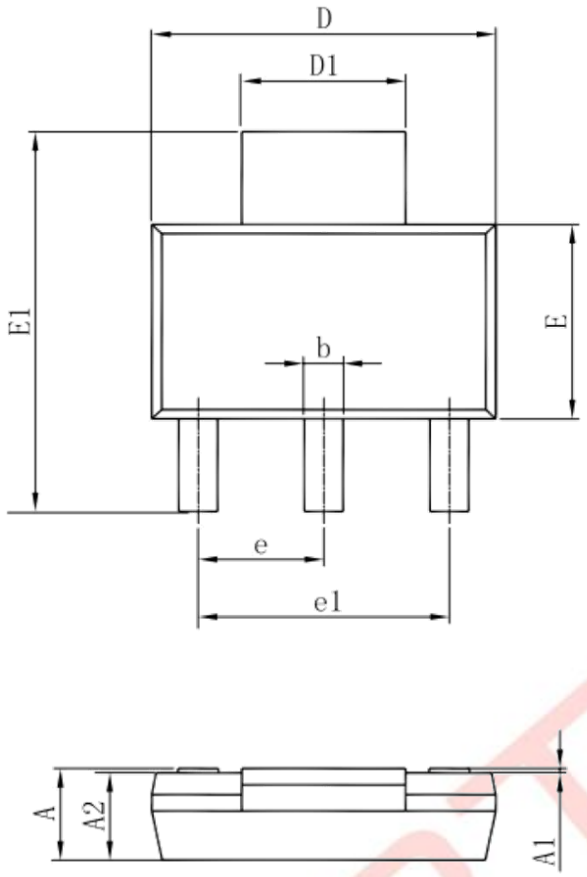

Symbol	Dimensions In Millimeters		Dimensions In Inches	
	Min	Max	Min	Max
A	1.520	1.800	0.060	0.071
A1	0.000	0.100	0.000	0.004
A2	1.500	1.700	0.059	0.067
b	0.660	0.820	0.026	0.032
c	0.250	0.350	0.010	0.014
D	6.200	6.400	0.244	0.252
D1	2.900	3.100	0.114	0.122
E	3.300	3.700	0.130	0.146
E1	6.830	7.070	0.269	0.278
e	2.300(BSC)		0.091(BSC)	
e1	4.500	4.700	0.177	0.185
L	0.900	1.150	0.035	0.045
θ	0°	10°	0°	10°

Package Outline

TO-252-2L

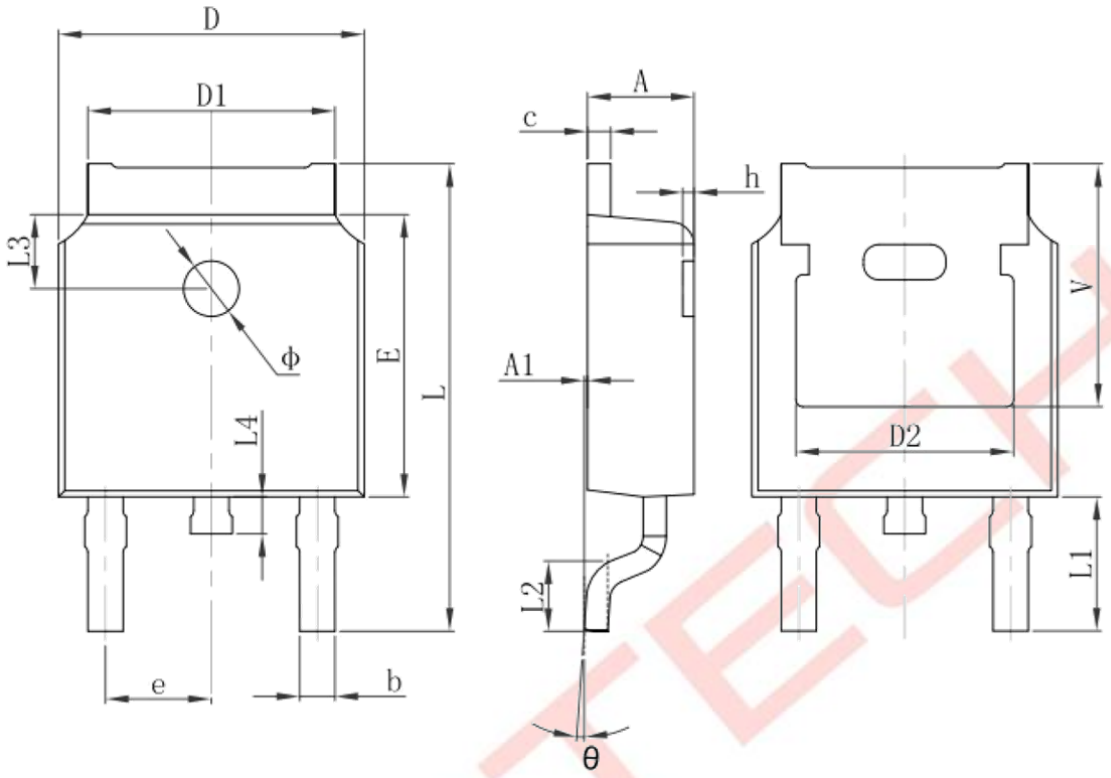

Symbol	Dimensions In Millimeters		Dimensions In Inches	
	Min.	Max.	Min.	Max.
A	2.200	2.400	0.087	0.094
A1	0.000	0.127	0.000	0.005
b	0.660	0.860	0.026	0.034
c	0.460	0.580	0.018	0.023
D	6.500	6.700	0.256	0.264
D1	5.100	5.460	0.201	0.215
D2	4.830 REF.		0.190 REF.	
E	6.000	6.200	0.236	0.244
e	2.186	2.386	0.086	0.094
L	9.800	10.400	0.386	0.409
L1	2.900 REF.		0.114 REF.	
L2	1.400	1.700	0.055	0.067
L3	1.600 REF.		0.063 REF.	
L4	0.600	1.000	0.024	0.039
Φ	1.100	1.300	0.043	0.051
θ	0°	8°	0°	8°
h	0.000	0.300	0.000	0.012
V	5.350 REF.		0.211 REF.	