AK8975/AK8975C

3-axis Electronic Compass

1. Features

A 3-axis electronic compass IC with high sensitive Hall sensor technology.
Best adapted to pedestrian city navigation use for cell phone and other portable appliance.

Functions:

- 3-axis magnetometer device suitable for compass application
- Built-in A to D Converter for magnetometer data out
- 13 bit data out for each 3 axis magnetic components
  - Sensitivity: 0.3 μT / LSB typ.
- Serial interface
  - I^2C bus interface.
    Standard mode and Fast mode compliant with Philips I^2C specification Ver.2.1
  - 4-wire SPI
- Operation mode:
  Power-down mode, Single Measurement mode, Self test mode and Fuse access mode.
- DRDY function for measurement data ready
- Magnetic sensor overflow monitor function
- Built-in oscillator for internal clock source
- Power on Reset circuit
- Self test function with built-in internal magnetic source

Operating temperatures:

- -30°C to +85°C

Operating supply voltage:

- Analog power supply +2.4V to +3.6V
- Digital Interface supply +1.65V to analog power supply voltage.

Current consumption:

- Power-down: 10 μA max.
- Measurement:
  - Average power consumption at 8 Hz repetition rate: 350 μA typ.

Package:

AK8975	16-pin QFN package:	4.0 mm × 4.0 mm × 0.75 mm
AK8975C	14-pin WL-CSP (BGA):	2.0 mm × 2.0 mm × 0.6 mm

2. Overview

AK8975/C is 3-axis electronic compass IC with high sensitive Hall sensor technology.
Small package of AK8975/C incorporates magnetic sensors for detecting terrestrial magnetism in the X-axis, Y-axis, and Z-axis, a sensor driving circuit, signal amplifier chain, and an arithmetic circuit for processing the signal from each sensor. Self test function is also incorporated. From its compact foot print and thin package feature, it is suitable for map heading up purpose in GPS-equipped cell phone to realize pedestrian navigation function.

AK8975/C has the following features:

(1) Silicon monolithic Hall-effect magnetic sensor with magnetic concentrator realizes 3-axis magnetometer on a silicon chip. Analog circuit, digital logic, power block and interface block are also integrated on a chip.

(2) Wide dynamic measurement range and high resolution with lower current consumption.

Output data resolution:	13 bit (0.3 μT / LSB)
Measurement range:	±1200 μT
Average power consumption at 8Hz repetition rate:	350 μA typ.

(3) Digital serial interface
- I^2C bus interface to control AK8975/C functions and to read out the measured data by external CPU. A dedicated power supply for I^2C bus interface can work in low-voltage apply as low as 1.65V.
- 4-wire SPI is also supported. A dedicated power supply for SPI can work in low-voltage apply as low as 1.65V.

(4) DRDY pin and register inform to system that measurement is end and set of data in registers are ready to be read.

(5) Device is worked by on-chip oscillator so no external clock source is necessary.

(6) Self test function with internal magnetic source to confirm magnetic sensor operation on end products.

3. Table of Contents

1. Features 1
2. Overview 2
3. Table of Contents 3
4. Circuit Configuration 5
4.1. Block Diagram 5
4.2. Block Function 5
4.3. Pin Function 6
5. Overall Characteristics 7
5.1. Absolute Maximum Ratings 7
5.2. Recommended Operating Conditions 7
5.3. Electrical Characteristics 7
5.3.1. DC Characteristics 7
5.3.2. AC Characteristics 8
5.3.3. Analog Circuit Characteristics 8
5.3.4. 4-wire SPI 9
5.3.5. I^2C Bus Interface 10
6. Functional Explanation 11
6.1. Power States 11
6.2. Reset Functions 11
6.3. Operation Modes 12
6.4. Description of Each Operation Mode 13
6.4.1. Power-down Mode 13
6.4.2. Single Measurement Mode 13
6.4.2.1. Data Ready 13
6.4.2.2. Data Error 14
6.4.2.3. Magnetic Sensor Overflow 14
6.4.3. Self-test Mode 15
6.4.4. Fuse ROM Access Mode 15
7. Serial Interface 16
7.1. 4-wire SPI 16
7.1.1. Writing Data 16
7.1.2. Reading Data 17
7.2. I^2C Bus Interface 18
7.2.1. Data Transfer 18
7.2.1.1. Change of Data 18
7.2.1.2. Start/Stop Condition 18
7.2.1.3. Acknowledge 19
7.2.1.4. Slave Address 19
7.2.2. WRITE Instruction 20
7.2.3. READ Instruction 21
7.2.3.1. One Byte READ 21
7.2.3.2. Multiple Byte READ 21
8. Registers 22
8.1. Description of Registers 22
8.2. Register Map 23
8.3. Detailed Description of Registers 24
8.3.1. WIA: Device ID 24
8.3.2. INFO: Information 24
8.3.3. ST1: Status 1 24
8.3.4. HXL to HZH: Measurement Data 25
8.3.5. ST2: Status 2 26
8.3.6. CNTL: Control 26
8.3.7. RSV: Reserved 27
8.3.8. ASTC: Self Test Control 27
8.3.9. TS1, TS2: Test 1, 2 27
8.3.10. I2CDIS: I^2C Disable 27
8.3.11. ASAX, ASAY, ASAZ: Sensitivity Adjustment values 28

9. Example of Recommended External Connection 29
9.1. I^2C Bus Interface 29
9.2. 4-wire SPI 30
10. Package 31
10.1. Marking 31
10.2. Pin Assignment 31
10.3. Outline Dimensions 32
10.4. Recommended Foot Print Pattern 33
11. Relationship between the Magnetic Field and Output Code 34

4. Circuit Configuration

4.1. Block Diagram

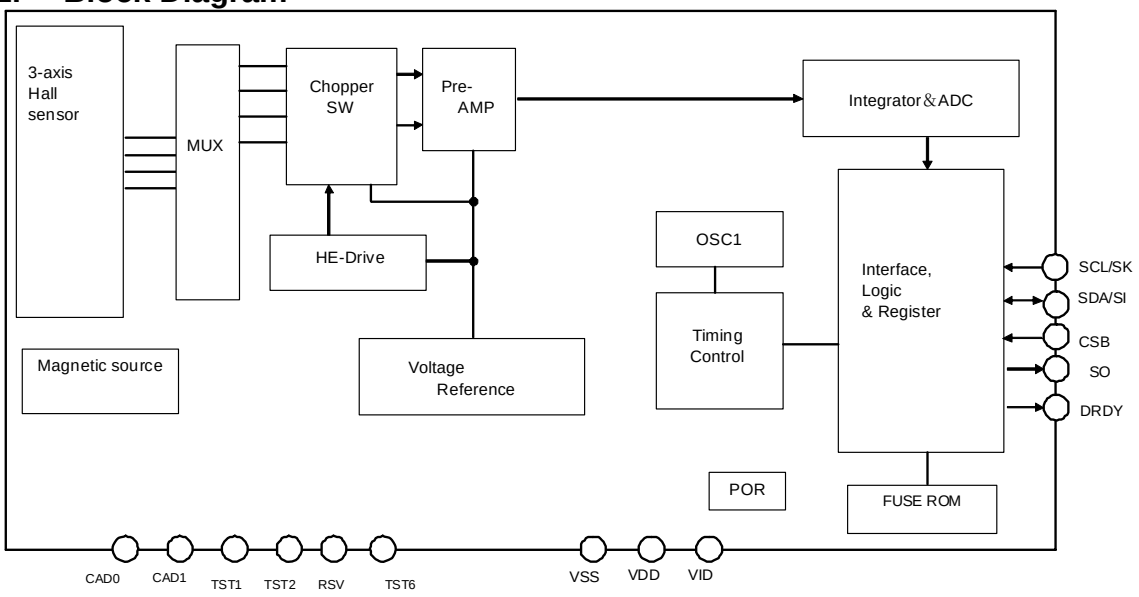

4.2. Block Function

Block	Function
3-axis Hall sensor	Monolithic Hall elements.
MUX	Multiplexer for selecting Hall elements.
Chopper SW	Performs chopping.
HE-Drive	Magnetic sensor drive circuit for constant-current driving of sensor
Pre-AMP	Variable-gain differential amplifier used to amplify the magnetic sensor signal.
Integrator & ADC	Integrates and amplifies pre-AMP output and performs analog-to-digital conversion.
OSC1	Generates an operating clock for sensor measurement. 6.144MHz(typ.)
POR	Power On Reset circuit. Generates reset signal on rising edge of VDD.
Interface Logic	Exchanges data with an external CPU. DRDY pin indicates sensor measurement end and data is ready to be read. I^2C bus interface using two pins, namely, SCL and SDA. Standard mode and Fast mode are supported. The low-voltage specification can be supported by applying 1.65V to the VID pin. 4-wire SPI is also supported by SK, SI, SO and CSB pins. 4-wire SPI works in VID pin voltage down to 1.65V, too.
Timing Control	Generates a timing signal required for internal operation from a clock generated by the OSC1.
Magnetic Source	Generates magnetic field for self test of magnetic sensor.
FUSE ROM	Fuse for adjustment

4.3. Pin Function

Pin No.		Pin name	I/O	Power supply system	Type	Function
75	75C					
1	A1	TST1	O	VDD	ANALOG	Test pin. Hi-Z output. Keep this pin electrically nonconnected.
2	A2	CSB	I	VID	CMOS	Chip select pin for 4-wire SPI. "L" active. Connect to VID when selecting I^2C bus interface.
3	A4	RSV	I	VID	CMOS	Reserved pin. Keep this pin electrically nonconnected or connect to VSS.
4	A3	SCL	I	VID	CMOS	When the I^2C bus interface is selected (CSB pin is connected to VID) SCL: Control data clock input pin Input: Schmidt trigger
		SK				When the 4-wire SPI is selected SK: Serial clock input pin
5	D4	SDA	I/O	VID	CMOS	When the I^2C bus interface is selected (CSB pin is connected to VID) SDA: Control data input/output pin Input: Schmidt trigger, Output: Open drain
		SI	I			When the 4-wire SPI is selected SI: Serial data input pin
6	B4	SO	O	VID	CMOS	When the I^2C bus interface is selected (CSB pin is connected to VID) Hi-Z output. Keep this pin electrically nonconnected.
						When the 4-wire SPI is selected Serial data output pin
7	C4	VID	-	-	Power	Digital interface positive power supply pin.
8	-	NC1				Non-contact pin. Keep this pin electrically nonconnected.
9	B3	TST6	O	VID	CMOS	Test pin. Vss output. Keep this pin electrically nonconnected or connect to VSS..
10	C3	DRDY	O	VID	CMOS	Data ready signal output pin. Active "H". Informs measurement ended and data is ready to be read.
11	D2	CAD1	I	VDD	CMOS	When the I^2C bus interface is selected (CSB pin is connected to VID) CAD1: Slave address 1 input pin Connect to VSS or VDD.
						When the 4-wire serial interface is selected Connect to VSS.
12	-	NC2				Non-contact pin. Keep this pin electrically nonconnected.
13	D1	CAD0	I	VDD	CMOS	When the I^2C bus interface is selected (CSB pin is connected to VID) CAD0: Slave address 0 input pin Connect to VSS or VDD.
						When the 4-wire serial interface is selected Connect to VSS.
14	C2	TST2	O	VDD	ANALOG	Test pin. Hi-Z output. Keep this pin electrically nonconnected.
15	C1	VSS	-	-	Power	Ground pin.
16	B1	VDD	-	-	Power	Analog Power supply pin.

5. Overall Characteristics

5.1. Absolute Maximum Ratings

Vss=0V

Parameter	Symbol	Min.	Max.	Unit
Power supply voltage (Vdd, Vid)	V+	-0.3	+6.5	V
Input voltage	VIN	-0.3	(V+)+0.3	V
Input current	IIN	-	±10	mA
Storage temperature	TST	-40	+125	°C

(Note 1) If the device is used in conditions exceeding these values, the device may be destroyed. Normal operations are not guaranteed in such exceeding conditions.

5.2. Recommended Operating Conditions

Vss=0V

Parameter	Remark	Symbol	Min.	Typ.	Max.	Unit
Operating temperature		Ta	-30		+85	°C
Power supply voltage	VDD pin voltage	Vdd	2.4	3.0	3.6	V
	VID pin voltage	Vid	1.65		Vdd	V

5.3. Electrical Characteristics

The following conditions apply unless otherwise noted:
Vdd=2.4V to 3.6V, Vid=1.65V to Vdd, Temperature range=-30°C to 85°C

5.3.1. DC Characteristics

Parameter	Symbol	Pin	Condition	Min.	Typ.	Max.	Unit
High level input voltage 1	VIH1	CSB SK SI		70%Vid			V
Low level input voltage 1	VIL1					30%Vid	V
High level input voltage 2	VIH2	SCL SDA		70%Vid			V
Low level input voltage 2	VIL2					30%Vid	V
High level input voltage 3	VIH3	CAD0 CAD1		70%Vdd			V
Low level input voltage 3	VIL3					30%Vdd	V
Input current	IIN	SCL SK SDA SI CSB	Vin=Vss or Vid	-10		+10	μA
Hysteresis input voltage (Note 2)	VHS	SCL SDA	Vid≥2V	5%Vid			V
			Vid<2V	10%Vid			V
High level output voltage 1	VOH1	SO DRDY	IOH≥-100μA (Note 5)	80%Vid			V
Low level output voltage 1	VOL1		IOL≤+100μA (Note 5)			20%Vid	V
Low level output voltage 2 (Note 3)(Note 4)	VOL2	SDA	IOL≤3mA Vid≥2V			0.4	V
			IOL≤3mA Vid<2V			20%Vid	V
Current consumption	IDD1	VDD VID	Power-down mode Vdd=Vid=3.0V		3	10	μA
	IDD2		When magnetic sensor is driven		6	10	mA
	IDD3 (Note 6)		Self-test mode		10.3	15	mA

(Note 2) Schmitt trigger input (reference value for design)
(Note 3) Maximum load capacitance: 400pF (capacitive load of each bus line applied to the I^2C bus interface)
(Note 4) Output is open-drain. Connect a pull-up resistor externally.
(Note 5) Load capacitance: 20pF
(Note 6) Reference value for design.

5.3.2. AC Characteristics

Parameter	Symbol	Pin	Condition	Min.	Typ.	Max.	Unit
Power supply rise time (Note 7)	tPUP	VDD	Period of time from 10%Vdd to 90%Vdd (Note 8)			200	μs
Power-down mode transit time (Note 7)		VDD	Period of time from 90%Vdd at power-on to Power-down mode			100	μs
Wait time before mode setting	Twat			100			μs

(Note 7) Reference value for design

(Note 8) Only when VDD meets this condition, POR circuit starts and resets AK8975/C. After reset, all registers are initialized and AK8975/C transits to Power-down mode.

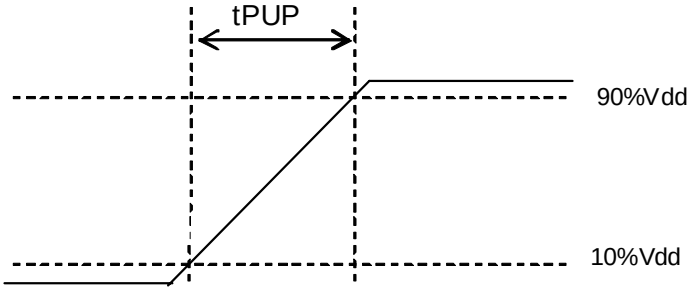

5.3.3. Analog Circuit Characteristics

Parameter	Symbol	Condition	Min.	Typ.	Max.	Unit
Measurement data output bit	DBIT			13		bit
Time for measurement	TSM	Single measurement mode		7.3	9	ms
Magnetic sensor sensitivity	BSE	Tc=25°C (Note 9)	0.285	0.3	0.315	μT/LSB
Magnetic sensor measurement range (Note 10)	BRG	Tc=25°C (Note 9)		±1229		μT
Magnetic sensor initial offset (Note 11)		Tc=25°C	-1000		+1000	LSB

(Note 9) Value after sensitivity is adjusted using sensitivity fine adjustment data stored in Fuse ROM. (Refer to 8.3.11 for how to adjust.)

(Note 10) Reference value for design

(Note 11) Value of measurement data register on shipment without applying magnetic field on purpose.

5.3.4. 4-wire SPI

4-wire SPI is compliant with mode 3

Parameter	Symbol	Condition	Min.	Typ.	Max.	Unit
CSB setup time	Tcs		50			ns
Data setup time	Ts		50			ns
Data hold time	Th		50			ns
SK high time	Twh	Vid≥2.5V	100			ns
		2.5V>Vid≥1.65V	150			ns
SK low time	Twl	Vid≥2.5V	100			ns
		2.5V>Vid≥1.65V	150			ns
SK setup time	Tsd		50			ns
SK to SO delay time (Note 12)	Tdd				50	ns
CSB to SO delay time (Note 12)	Tcd				50	ns
SK rise time (Note 13)	Tr				100	ns
SK fall time (Note 13)	Tf				100	ns
CSB high time	Tch		150			ns

(Note 12) SO load capacitance: 20pF
(Note 13) Reference value for design.

[4-wire SPI]

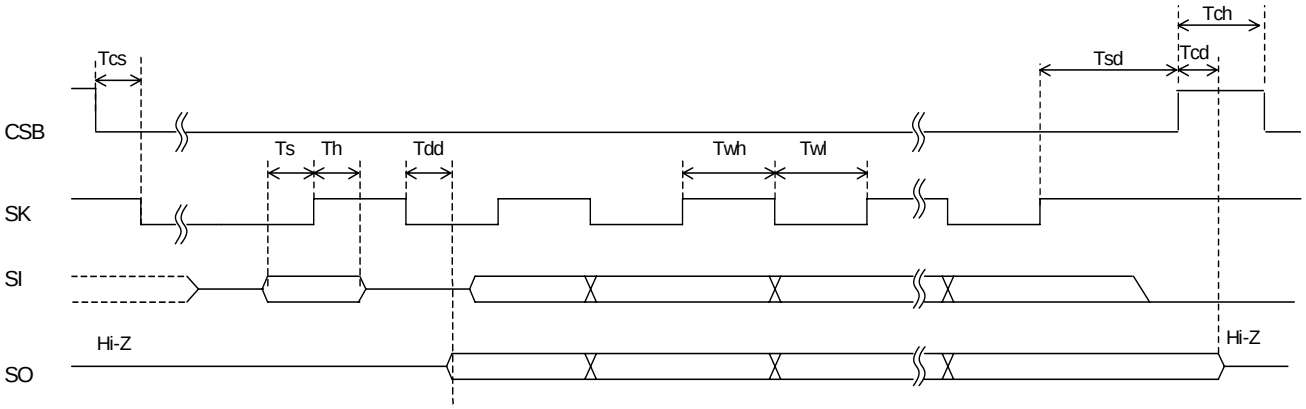

[Rise time and fall time]

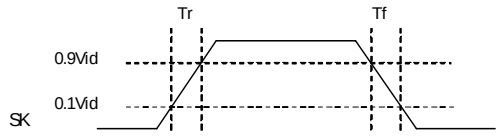

5.3.5. I²C Bus Interface

CSB pin = "H"

I²C bus interface is compliant with Standard mode and Fast mode. Standard/Fast mode is selected automatically by fSCL.

(1) Standard mode

fSCL≤100kHz

1.65V≤Vid≤Vdd

Symbol	Parameter	Min.	Typ.	Max.	Unit
fSCL	SCL clock frequency			100	kHz
tHIGH	SCL clock "High" time	4.0			µs
tLOW	SCL clock "Low" time	4.7			µs
tR	SDA and SCL rise time			1.0	µs
tF	SDA and SCL fall time			0.3	µs
tHD:STA	Start Condition hold time	4.0			µs
tSU:STA	Start Condition setup time	4.7			µs
tHD:DAT	SDA hold time (vs. SCL falling edge)	0			µs
tSU:DAT	SDA setup time (vs. SCL rising edge)	250			ns
tSU:STO	Stop Condition setup time	4.0			µs
tBUF	Bus free time	4.7			µs

(2) Fast mode

100kHz<fSCL≤400kHz

1.65V≤Vid≤Vdd

Symbol	Parameter	Min.	Typ.	Max.	Unit
fSCL	SCL clock frequency			400	kHz
tHIGH	SCL clock "High" time	0.6			µs
tLOW	SCL clock "Low" time	1.3			µs
tR	SDA and SCL rise time			0.3	µs
tF	SDA and SCL fall time			0.3	µs
tHD:STA	Start Condition hold time	0.6			µs
tSU:STA	Start Condition setup time	0.6			µs
tHD:DAT	SDA hold time (vs. SCL falling edge)	0			µs
tSU:DAT	SDA setup time (vs. SCL rising edge)	100			ns
tSU:STO	Stop Condition setup time	0.6			µs
tBUF	Bus free time	1.3			µs
tSP	Noise suppression pulse width			50	ns

[I²C bus interface timing]

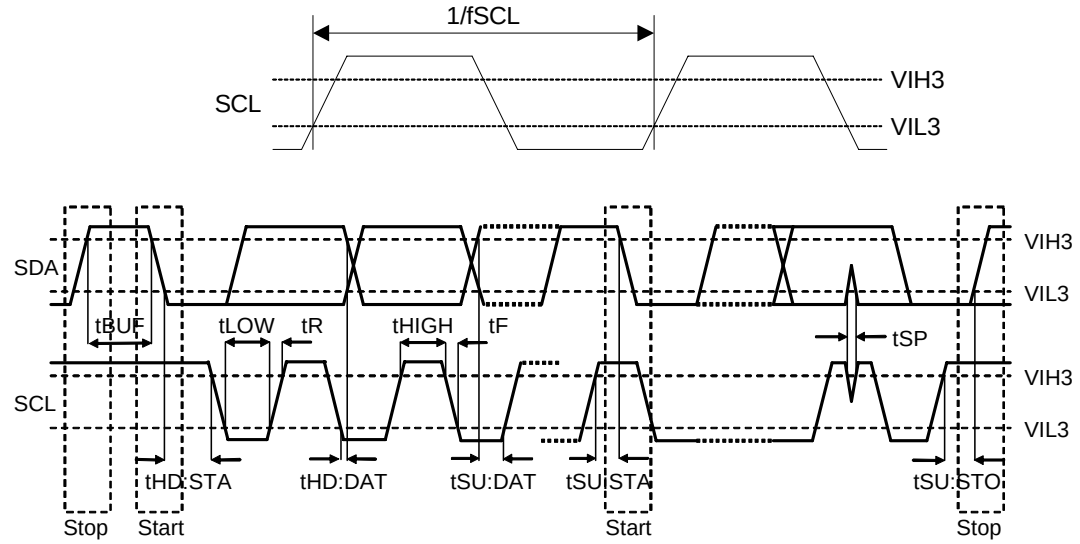

6. Functional Explanation

6.1. Power States

When VDD and VID are turned on from Vdd=OFF (0V) and Vid=OFF (0V), all registers in AK8975/C are initialized by POR circuit and AK8975/C transits to Power-down mode.

All the states in the table below can be set, although the transition from state 2 to state 3 and the transition from state 3 to state 2 are prohibited.

States	VDD	VID	Power states
1	OFF (0V)	OFF (0V)	OFF (0V). SCL, SDA should be fixed to the voltage that does not exceed 3.6V. Other digital pins should be fixed to L(0V).
2	OFF (0V)	1.65V to 3.6V	OFF (0V). It doesn't affect external interface.
3	2.4V to 3.6V	OFF (0V)	OFF (0V). It consumes current same as Power-down mode. SCL, SDA should be fixed to the voltage that does not exceed 3.6V. Other digital pins should be fixed to L (0V).
4	2.4V to 3.6V	1.65V to Vdd	ON

Table 6.1

6.2. Reset Functions

AK8975/C has two types of reset;

(1) Power on reset (POR)
When Vdd reaches approximately 2V (reference value for design), POR circuit operates, and AK8975/C is reset.

(2) VID monitor
When Vid is turned OFF (0V), AK8975/C is reset.

When AK8975/C is reset, all registers are initialized and AK8975/C transits to Power-down mode.

6.3. Operation Modes

AK8975/C has following four operation modes:

(1) Power-down mode
(2) Single measurement mode
(3) Self-test mode
(4) Fuse ROM access mode

By setting CNTL register MODE[3:0] bits, the operation set for each mode is started.
A transition from one mode to another is shown below.

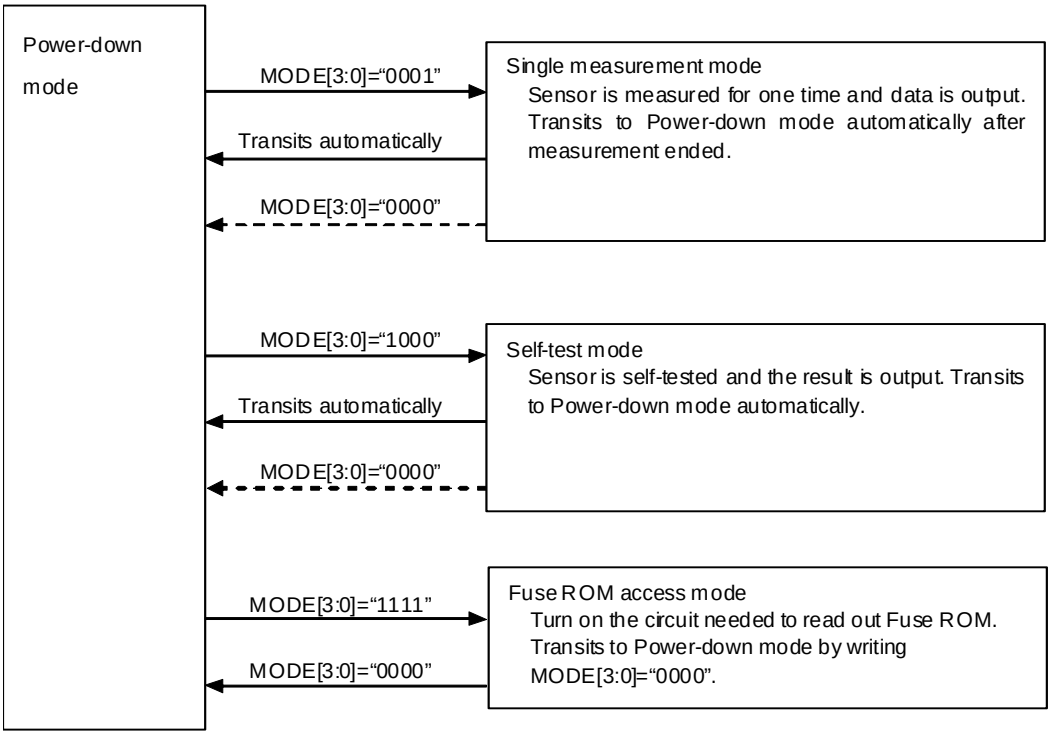

Figure 6.1 Operation modes

When power is turned ON, AK8975/C is in power-down mode. When MODE[3:0] is set, AK8975/C transits to the specified mode and starts operation. When user wants to change operation mode, transit to power-down mode first and then transit to other modes. After power-down mode is set, at least 100μs(Twat) is needed before setting another mode.

6.4. Description of Each Operation Mode

6.4.1. Power-down Mode

Power to all internal circuits is turned off. All registers except fuse ROM are accessible in power-down mode. Data stored in read/write registers are remained.

6.4.2. Single Measurement Mode

When single measurement mode (MODE[3:0]="0001") is set, sensor is measured, and after sensor measurement and signal processing is finished, measurement data is stored to measurement data registers (HXL to HZH), then AK8975/C transits to power-down mode automatically. On transition to power-down mode, MODE[3:0] turns to "0000". At the same time, DRDY bit in ST1 register turns to "1". This is called "Data Ready". When any of measurement data register (HXL to HZH) or ST2 register is read, or operation mode is changed from power-down mode to other mode, DRDY bit turns to "0". DRDY pin is in the same state as DRDY bit.

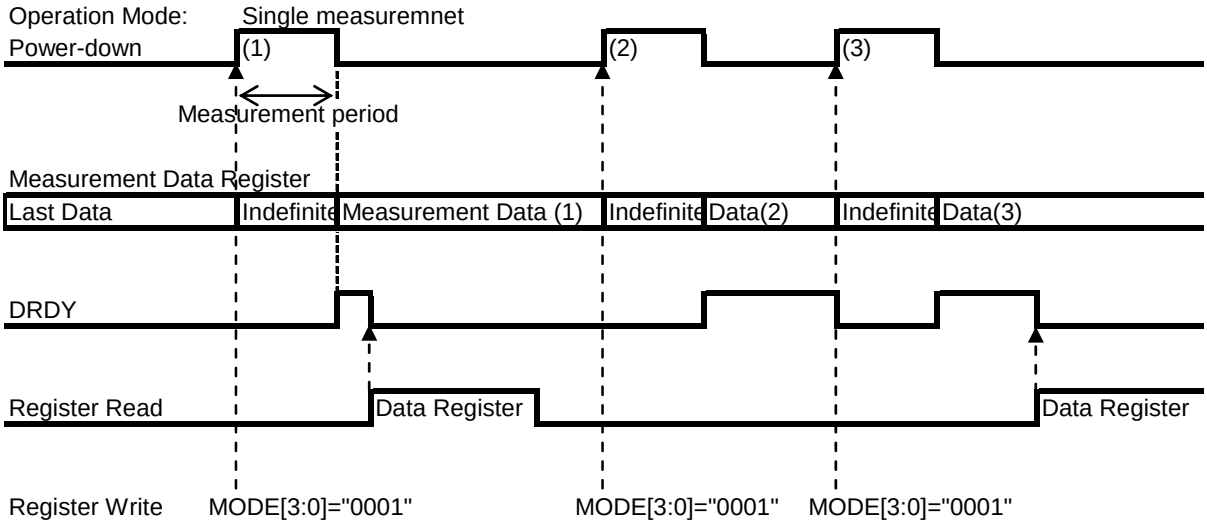

Figure 6.2 Single measurement mode

6.4.2.1. Data Ready

When measurement data is stored and ready to be read, DRDY bit in ST1 register turns to "1". This is called "Data Ready". DRDY pin is in the same state as DRDY bit. When measurement is performed correctly, AK8975/C becomes Data Ready on transition to Power-down mode (PD) after measurement. The period from the end of Nth measurement to the start of (N+1)th measurement is called "Data Readable Period". Stored measurement data should be read during Data Readable Period.

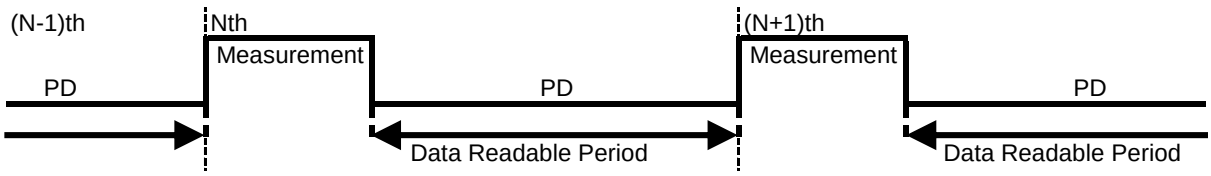

Figure 6.3 Data Readable Period

6.4.2.2. Data Error

When data reading is started out of data readable period, read data is not correct. In this case, DERR bit of ST2 register turns to "1" so that read data can be checked at the end of data reading. DERR turns to "0" when ST2 register is read.

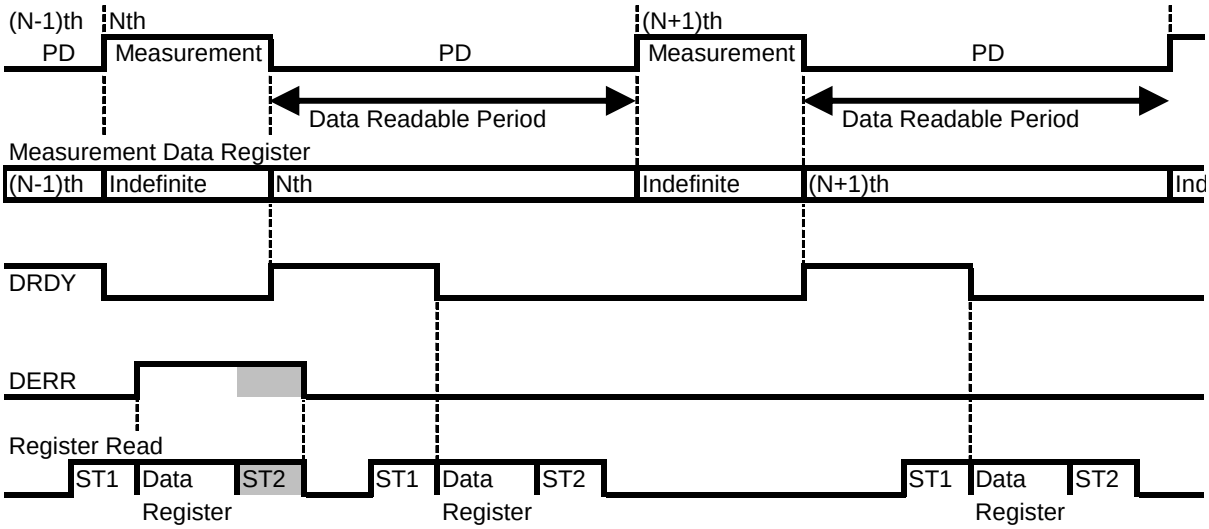

Figure 6.4 Data Error

6.4.2.3. Magnetic Sensor Overflow

AK8975/C has the limitation for measurement range that the sum of absolute values of each axis should be smaller than 2400μT.

$$|X|+|Y|+|Z| < 2400\mu T$$

When the magnetic field exceeded this limitation, data stored at measurement data are not correct. This is called Magnetic Sensor Overflow.

When magnetic sensor overlow occurs, HOFL bit turns to "1". When the next measurement starts, it returns to "0".

6.4.3. Self-test Mode

Self-test mode is used to check if the sensor is working normally.
When self-test mode (MODE[3:0]="1000") is set, magnetic field is generated by the internal magnetic source and sensor is measured. Measurement data is stored to measurement data registers (HXL to HZH), then AK8975/C transits to power-down mode automatically.
Before setting self-test mode, write "1" to SELF bit of ASTC register. Data read sequence and functions of read-only registers in self-test mode is the same as single measurement mode.

When self-test is end, write "0" to SELF bit then proceed to other operation.

<Self-test Sequence>
(1) Set Power-down mode
(2) Write "1" to SELF bit of ASTC register
(3) Set Self-test Mode
(4) Check Data Ready or not by any of the following method.
    - Polling DRDY bit of ST1 register
    - Monitor DRDY pin
    When Data Ready, proceed to the next step.
(5) Read measurement data (HXL to HZH)
(6) Write "0" to SELF bit of ASTC register

<Self-test Judgement>
When measurement data read by the above sequence is in the range of following table after sensitivity adjustment (refer to 8.3.11), AK8975/C is working normally.

	HX[15:0]	HY[15:0]	HZ[15:0]
Criteria	-100≤X≤+100	-100≤Y≤+100	-1000≤Z≤-300

6.4.4. Fuse ROM Access Mode

Fuse ROM access mode is used to read Fuse ROM data.Sensitivity adjustment data for each axis is stored in fuse ROM. These data are used in calculation of direction by the external CPU.
When Fuse ROM mode (MODE[3:0]="1111") is set, circuits reauired for reading fuse ROM are turned on. After reading fuse ROM data, set power-down mode (MODE[3:0]="0000").

7. Serial Interface

AK8975/C supports I^2C bus interface and 4-wire SPI. A selection is made by CSB pin. When used as 3-wire SPI, set SI pin and SO pin wired-OR externally.

CSB pin="L": 4-wire SPI
CSB pin="H": I^2C bus interface

7.1. 4-wire SPI

The 4-wire SPI consists of four digital signal lines: SK, SI, SO, and CSB. It is compliant with sequencial read operation.
Data consists of Read/Write control bit (R/W), register address (7bits) and control data (8bits).
CSB pin is low active. Input data is taken in on the rising edge of SK pin, and output data is changed on the falling edge of SK pin. (SPI MODE3)
Communication starts when CSB pin transits to "L" and stops when CSB pin transits to "H". SK pin must be "H" during CSB pin is in transition. Also, it is prohibited to change SI pin during CSB pin is "H" and SK pin is "H".

7.1.1. Writing Data

Input 16 bits data on SI pin in synchronous with the 16-bit serial clock input on SK pin. Out of 16 bits input data, the first 8 bits specify the R/W control bit (R/W="0" when writing) and register address (7bits), and the latter 8 bits are control data (8bits). When any of addresses listed on Table 8.1 is input, AK8975/C recognizes that it is selected and takes in latter 8 bits as setting data.
If the number of clock pulses is less than 16, no data is written. If the number of clock pulses is more than 16, data after the 16th clock pulse on SI pin are ignored.
It is not compliant with sereal write operation for multiple addresses.

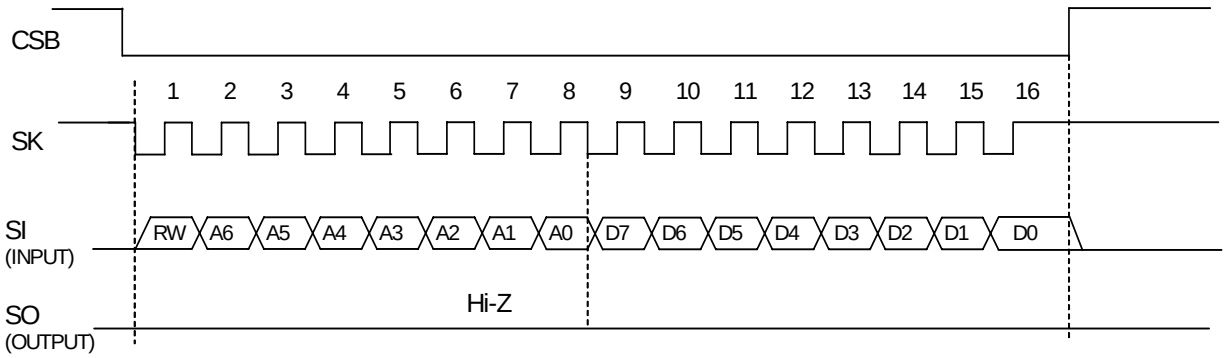

Figure 7.1 4-wire SPI Writing Data

7.1.2. Reading Data

Input the R/W control bit (R/W="1") and 7 bit register address on SI pin in synchronous with the first 8 bits of the 16 bits of a serial clock input on SK pin. Then AK8975/C outputs the data held in the specified register with MSB first from SO pin.

When clocks are input continuously after one byte of data is read, the address is incremented and data in the next address is output. Accordingly, after the falling edge of the 15th clock and CSB pin is "L", the data in the next address is output on SO pin. When CSB pin is driven "L" to "H", SO pin is placed in the high-impedance state.

AK8975/C has two incrementation lines; 00H to 0CH and 10H to 12H. For example, data is read as follows: 00H -> 01H ... -> 0BH -> 0CH -> 00H -> 01H ..., and 10H -> 11H -> 12H -> 10H …

When specified address is other than 00H to 12H, AK8975/C recognizes that it is not selected and keeps SO pin in high-impedance state. Therefore, user can use other addresses for other devices.

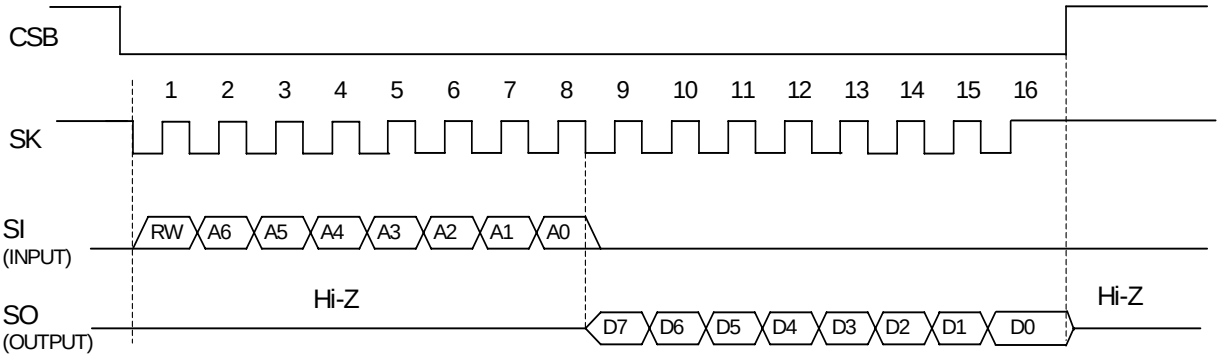

Figure 7.2 4-wire SPI Reading Data

7.2. I²C Bus Interface

The I²C bus interface of AK8975/C supports the standard mode (100 kHz max.) and the fast mode (400 kHz max.).

7.2.1. Data Transfer

To access AK8975/C on the bus, generate a start condition first.
Next, transmit a one-byte slave address including a device address. At this time, AK8975/C compares the slave address with its own address. If these addresses match, AK8975/C generates an acknowledgement, and then executes READ or WRITE instruction. At the end of instruction execution, generate a stop condition.

7.2.1.1. Change of Data

A change of data on the SDA line must be made during "Low" period of the clock on the SCL line. When the clock signal on the SCL line is "High", the state of the SDA line must be stable. (Data on the SDA line can be changed only when the clock signal on the SCL line is "Low".)
During the SCL line is "High", the state of data on the SDA line is changed only when a start condition or a stop condition is generated.

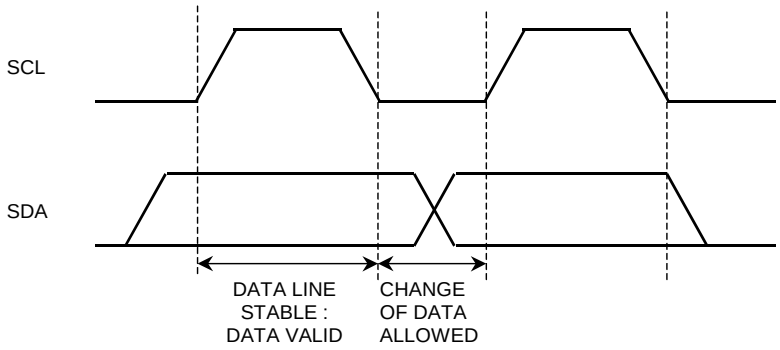

Figure 7.3 Data Change

7.2.1.2. Start/Stop Condition

If the SDA line is driven to "Low" from "High" when the SCL line is "High", a start condition is generated. Any instruction starts with a start condition.
If the SDA line is driven to "High" from "Low" when the SCL line is "High", a stop condition is generated. Any instruction stops with a stop condition.

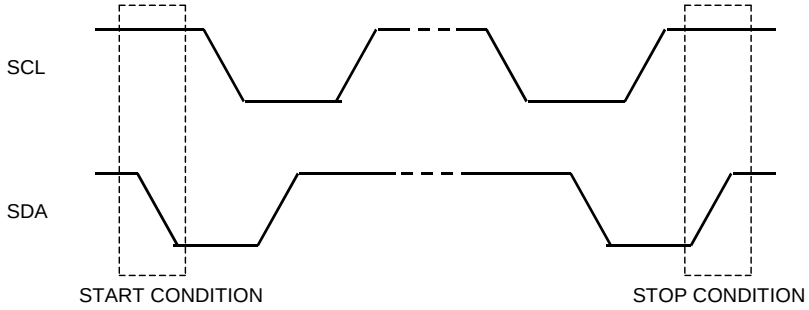

Figure 7.4 Start and Stop Conditions

7.2.1.3. Acknowledge

The IC that is transmitting data releases the SDA line (in the "High" state) after sending 1-byte data.
The IC that receives the data drives the SDA line to "Low" on the next clock pulse. This operation is referred to acknowledge. With this operation, whether data has been transferred successfully can be checked.
AK8975/C generates an acknowledge after reception of a start condition and slave address.
When a WRITE instruction is executed, AK8975/C generates an acknowledge after every byte is received.
When a READ instruction is executed, AK8975/C generates an acknowledge then transfers the data stored at the specified address. Next, AK8975/C releases the SDA line then monitors the SDA line. If a master IC generates an acknowledge instead of a stop condition, AK8975/C transmits the 8bit data stored at the next address. If no acknowledge is generated, AK8975/C stops data transmission.

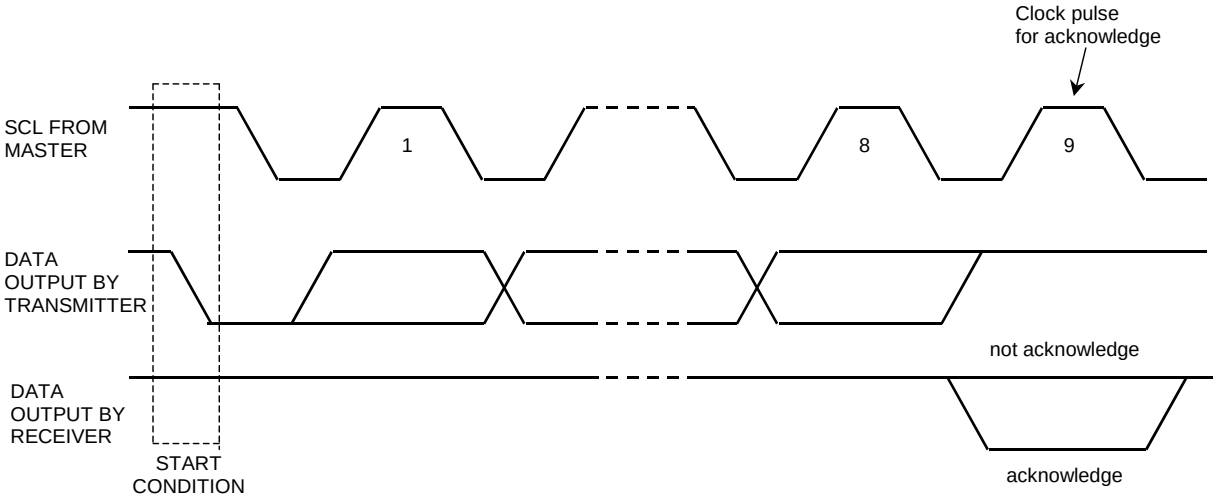

Figure 7.5 Generation of Acknowledge

7.2.1.4. Slave Address

The slave address of AK8975/C can be selected from the following list by setting CAD0/1 pin. When CAD pin is fixed to VSS, the corresponding slave address bit is “0”. When CAD pin is fixed to VDD, the corresponding slave address bit is “1”.

CAD1	CAD0	Slave Address
0	0	0CH
0	1	0DH
1	0	0EH
1	1	0FH

Table 7.1 Slave Address and CAD0/1 pin

The first byte including a slave address is transmitted after a start condition, and an IC to be accessed is selected from the ICs on the bus according to the slave address.
When a slave address is transferred, the IC whose device address matches the transferred slave address generates an acknowledge then executes an instruction. The 8th bit (least significant bit) of the first byte is a R/W bit.
When the R/W bit is set to "1", READ instruction is executed. When the R/W bit is set to "0", WRITE instruction is executed.

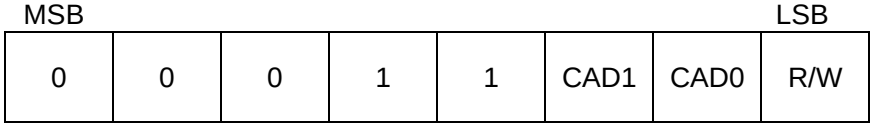

Figure 7.6 Slave Address

7.2.2. WRITE Instruction

When the R/W bit is set to "0", AK8975/C performs write operation.
In write operation, AK8975/C generates an acknowledge after receiving a start condition and the first byte (slave address) then receives the second byte. The second byte is used to specify the address of an internal control register and is based on the MSB-first configuration.

MSB							LSB
A7	A6	A5	A4	A3	A2	A1	A0

Figure 7.7 Register Address

After receiving the second byte (register address), AK8975/C generates an acknowledge then receives the third byte.
The third and the following bytes represent control data. Control data consists of 8 bits and is based on the MSB-first configuration. AK8975/C generates an acknowledge after every byte is received. Data transfer always stops with a stop condition generated by the master.

MSB							LSB
D7	D6	D5	D4	D3	D2	D1	D0

Figure 7.8 Control Data

AK8975/C can write multiple bytes of data at a time.
After reception of the third byte (control data), AK8975/C generates an acknowledge then receives the next data.
If additional data is received instead of a stop condition after receiving one byte of data, the address counter inside the LSI chip is automatically incremented and the data is written at the next address.
The address is incremented from 00H to 0CH or from 10H to12H. When the address is in the range from 00H to 0CH, the address goes back to 00H after 0CH. When the address is in the range from 10H to 12H, the address goes back to 10H after 12H. Actual data is written only to Read/Write registers (0AH to 0FH).

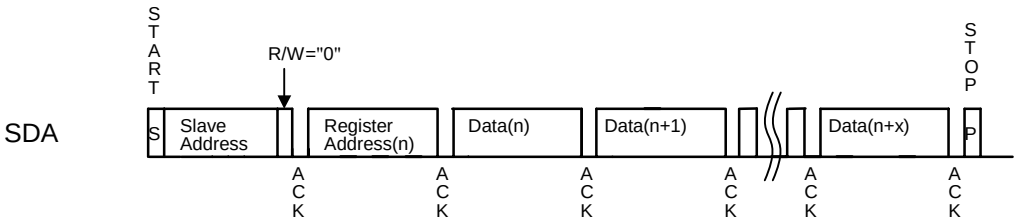

Figure 7.9 WRITE Instruction

7.2.3. READ Instruction

When the R/W bit is set to "1", AK8975/C performs read operation.

If a master IC generates an acknowledge instead of a stop condition after AK8975/C transfers the data at a specified address, the data at the next address can be read.

Address can be from 00H to 0CH and/or from 10H to 12H.When address is counted up to 0CH in the range of 00H to 0CH, the next address returns to 00H. When address is counted up to 12H in the range of 10H to 12H, the next address returns to 10H.

AK8975/C supports one byte read and multiple byte read.

7.2.3.1. One Byte READ

AK8975/C has an address counter inside the LSI chip. In current address read operation, the data at an address specified by this counter is read.

The internal address counter holds the next address of the most recently accessed address.

For example, if the address most recently accessed (for READ instruction) is address "n", and a current address read operation is attempted, the data at address "n+1" is read.

In one byte read operation, AK8975/C generates an acknowledge after receiving a slave address for the READ instruction (R/W bit="1"). Next, AK8975/C transfers the data specified by the internal address counter starting with the next clock pulse, then increments the internal counter by one. If the master IC generates a stop condition instead of an acknowledge after AK8975/C transmits one byte of data, the read operation stops.

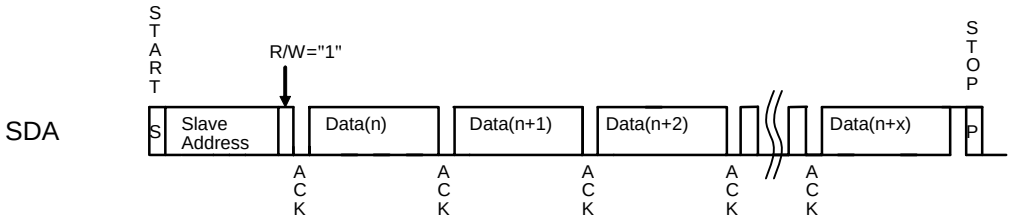

Figure 7.10 One Byte READ

7.2.3.2. Multiple Byte READ

By multiple byte read operation, data at an arbitrary address can be read.

The multiple byte read operation requires to execute WRITE instruction as dummy before a slave address for the READ instruction (R/W bit="1") is transmitted. In random read operation, a start condition is first generated then a slave address for the WRITE instruction (R/W bit="0") and a read address are transmitted sequentially.

After AK8975/C generates an acknowledge in response to this address transmission, a start condition and a slave address for the READ instruction (R/W bit="1") are generated again. AK8975/C generates an acknowledge in response to this slave address transmission. Next, AK8975/C transfers the data at the specified address then increments the internal address counter by one. If the master IC generates a stop condition instead of an acknowledge after data is transferred, the read operation stops.

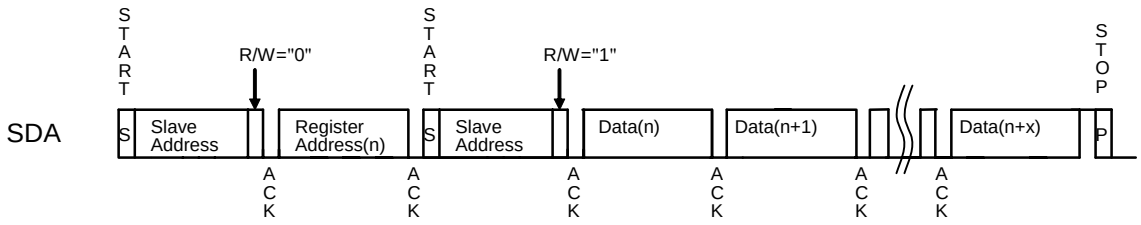

Figure 7.11 Multiple Byte READ

8. Registers

8.1. Description of Registers

AK8975/C has registers of 19 addresses as indicated in Table 8.1. Every address consists of 8 bits data. Data is transferred to or received from the external CPU via the serial interface described previously.

Name	Address	READ/ WRITE	Description	Bit width	Explanation
WIA	00H	READ	Device ID	8	
INFO	01H	READ	Information	8	
ST1	02H	READ	Status 1	8	Data status
HXL	03H	READ	Measurement data	8	X-axis data
HXH	04H			8	
HYL	05H			8	Y-axis data
HYH	06H			8	
HZL	07H			8	Z-axis data
HZH	08H			8	
ST2	09H	READ	Status 2	8	Data status
CNTL	0AH	READ/ WRITE	Control	8	
RSV	0BH	READ/ WRITE	Reserved	8	DO NOT ACCESS
ASTC	0CH	READ/ WRITE	Self-test	8	
TS1	0DH	READ/ WRITE	Test 1	8	DO NOT ACCESS
TS2	0EH	READ/ WRITE	Test 2	8	DO NOT ACCESS
I2CDIS	0FH	READ/ WRITE	I^2C disable	8	
ASAX	10H	READ	X-axis sensitivity adjustment value	8	Fuse ROM
ASAY	11H	READ	Y-axis sensitivity adjustment value	8	Fuse ROM
ASAZ	12H	READ	Z-axis sensitivity adjustment value	8	Fuse ROM

Table 8.1 Register Table

Addresses from 00H to 0CH and from 10H to 12H are compliant with automatic increment function of serial interface respectively. Values of addresses from 10H to 12H can be read only in Fuse access mode. In other modes, read data is not correct.

8.2. Register Map

Addr	Register Name	D7	D6	D5	D4	D3	D2	D1	D0
Read-only Register									
00H	WIA	0	1	0	0	1	0	0	0
01H	INFO	INFO7	INFO6	INFO5	INFO4	INFO3	INFO2	INFO1	INFO0
02H	ST1	0	0	0	0	0	0	0	DRDY
03H	HXL	HX7	HX6	HX5	HX4	HX3	HX2	HX1	HX0
04H	HXH	HX15	HX14	HX13	HX12	HX11	HX10	HX9	HX8
05H	HYL	HY7	HY6	HY5	HY4	HY3	HY2	HY1	HY0
06H	HYH	HY15	HY14	HY13	HY12	HY11	HY10	HY9	HY8
07H	HZL	HZ7	HZ6	HZ5	HZ4	HZ3	HZ2	HZ1	HZ0
08H	HZH	HZ15	HZ14	HZ13	HZ12	HZ11	HZ10	HZ9	HZ8
09H	ST2	0	0	0	0	HOFL	DERR	0	0
Write/read Register									
0AH	CNTL	0	0	0	0	MODE3	MODE2	MODE1	MODE0
0BH	RSV	-	-	-	-	-	-	-	-
0CH	ASTC	-	SELF	-	-	-	-	-	-
0DH	TS1	-	-	-	-	-	-	-	-
0EH	TS2	-	-	-	-	-	-	-	-
0FH	I2CDIS	-	-	-	-	-	-	-	I2CDIS
Read-only Register									
10H	ASAX	COEFX7	COEFX6	COEFX5	COEFX4	COEFX3	COEFX2	COEFX1	COEFX0
11H	ASAY	COEFY7	COEFY6	COEFY5	COEFY4	COEFY3	COEFY2	COEFY1	COEFY0
12H	ASAZ	COEFZ7	COEFZ6	COEFZ5	COEFZ4	COEFZ3	COEFZ2	COEFZ1	COEFZ0

Table 8.2 Register Map

When VDD is turned ON, POR function works and all registers of AK8975/C are initialized regardless of VID status. To write data to or to read data from register, VID must be ON.
TS1 and TS2 are test registers for shipment test. Do not use these registers.
RSV is reserved register. Do not use this register.

8.3. Detailed Description of Registers

8.3.1. WIA: Device ID

Addr	Register name	D7	D6	D5	D4	D3	D2	D1	D0
Read-only register									
00H	WIA	0	1	0	0	1	0	0	0

Device ID of AKM. It is described in one byte and fixed value.
48H: fixed

8.3.2. INFO: Information

Addr	Register name	D7	D6	D5	D4	D3	D2	D1	D0
Read-only register									
01H	INFO	INFO7	INFO6	INFO5	INFO4	INFO3	INFO2	INFO1	INFO0

INFO[7:0]: Device information for AKM.

8.3.3. ST1: Status 1

Addr	Register name	D7	D6	D5	D4	D3	D2	D1	D0
Read-only register									
02H	ST1	0	0	0	0	0	0	0	DRDY
Reset		0	0	0	0	0	0	0	0

DRDY: Data Ready
"0": Normal
"1": Data is ready
DRDY bit turns to “1” when data is ready in single measurement mode or self-test mode. It returns to “0” when any one of ST2 register or measurement data register (HXL to HZH) is read.

8.3.4. HXL to HZH: Measurement Data

Addr	Register name	D7	D6	D5	D4	D3	D2	D1	D0
Read-only register									
03H	HXL	HX7	HX6	HX5	HX4	HX3	HX2	HX1	HX0
04H	HXH	HX15	HX14	HX13	HX12	HX11	HX10	HX9	HX8
05H	HYL	HY7	HY6	HY5	HY4	HY3	HY2	HY1	HY0
06H	HYH	HY15	HY14	HY13	HY12	HY11	HY10	HY9	HY8
07H	HZL	HZ7	HZ6	HZ5	HZ4	HZ3	HZ2	HZ1	HZ0
08H	HZH	HZ15	HZ14	HZ13	HZ12	HZ11	HZ10	HZ9	HZ8
Reset		0	0	0	0	0	0	0	0

Measurement data of magnetic sensor X-axis/Y-axis/Z-axis

HXL[7:0]: X-axis measurement data lower 8bit
HXH[15:8]: X-axis measurement data higher 8bit
HYL[7:0]: Y-axis measurement data lower 8bit
HYH[15:8]: Y-axis measurement data higher 8bit
HZL[7:0]: Z-axis measurement data lower 8bit
HZH[15:8]: Z-axis measurement data higher 8bit

Measuremnet data is stored in two's complement and Little Endian format. Measurement range of each axis is from -4096 to +4095 in decimal.

Measurement data (each axis) [15:0]			Magnetic flux density [μT]
Two's complement	Hex	Decimal	
0000 1111 1111 1111	0FFF	4095	1229(max.)
|	|	|	|
0000 0000 0000 0001	0001	1	0.3
0000 0000 0000 0000	0000	0	0
1111 1111 1111 1111	FFFF	-1	-0.3
|	|	|	|
1111 0000 0000 0000	F000	-4096	-1229(min.)

Table 8.3 Measurement data format

8.3.5. ST2: Status 2

Addr	Register name	D7	D6	D5	D4	D3	D2	D1	D0
Read-only register									
09H	ST2	0	0	0	0	HOFL	DERR	0	0
Reset		0	0	0	0	0	0	0	0

DERR: Data Error
"0": Normal
"1": Data read error occurred
When data reading is started out of data readable period, the read data are not correct. In this case, data read error occurs and DERR bit turns to "1". When ST2 register is read, it returns to "0".

HOFL: Magnetic sensor overflow
"0": Normal
"1": Magnetic sensor overflow occurred
In single measurement mode and self-test mode, magnetic sensor may overflow even though measurement data regiseter is not saturated. In this case, measurement data is not correct and HOFL bit turns to "1". When next measurement stars, it returns to "0". Refer to 6.4.2.3 for detailed information.

8.3.6. CNTL: Control

Addr	Register name	D7	D6	D5	D4	D3	D2	D1	D0
Read-only register									
0AH	CNTL	0	0	0	0	MODE3	MODE2	MODE1	MODE0
Reset		0	0	0	0	0	0	0	0

MODE[3:0]: Operation mode setting
"0000": Power-down mode
"0001": Single measurement mode
"1000": Self-test mode
"1111": Fuse ROM access mode
Other code settings are prohibited

When each mode is set, AK8975/C transits to set mode. Refer to 6.3 for detailed information.
When CNTL register is accessed to be written, registers from 02H to 09H are initialized.

8.3.7. RSV: Reserved

Addr	Register name	D7	D6	D5	D4	D3	D2	D1	D0
Read-only register									
0BH	RSV	-	-	-	-	-	-	-	-
Reset		0	0	0	0	0	0	0	0

RSV register is reserved. Do not use this register.

8.3.8. ASTC: Self Test Control

Addr	Register name	D7	D6	D5	D4	D3	D2	D1	D0
Write/read register									
0CH	ASTC	-	SELF	-	-	-	-	-	-
Reset		0	0	0	0	0	0	0	0

SELF: Self test control

"0": Normal

"1": Generate magnetic field for self-test

Do not write "1" to any bit other than SELF bit in ASTC register. If "1" is written to any bit other than SELF bit, normal measurement can not be done.

8.3.9. TS1, TS2: Test 1, 2

Addr	Register name	D7	D6	D5	D4	D3	D2	D1	D0
Write/read register									
0DH	TS1	-	-	-	-	-	-	-	-
0EH	TS2	-	-	-	-	-	-	-	-
Reset		0	0	0	0	0	0	0	0

TS1 and TS2 registers are test registers for shipment test. Do not use these registers.

8.3.10. I2CDIS: I^2C Disable

Addr	Register name	D7	D6	D5	D4	D3	D2	D1	D0
Write/read register									
0FH	I2CDIS	-	-	-	-	-	-	-	I2CDIS
Reset		0	0	0	0	0	0	0	0

This register disables I^2C bus interface. I^2C bus interface is enabled in default. To disable I^2C bus interface, write "00011011" to I2CDIS register. Then I2CDIS bit turns to "1" and I^2C bus interface is disabled.
Once I2CDIS is turned to "1" and I^2C bus interface is disabled, re-setting I2CDIST to "0" is prohibited. To enable I^2C bus interface, reset AK8975/C by turning VDD or VID to OFF (0V) once.

8.3.11. ASAX, ASAY, ASAZ: Sensitivity Adjustment values

Addr	Register name	D7	D6	D5	D4	D3	D2	D1	D0
Read-only register									
10H	ASAX	COEFX7	COEFX6	COEFX5	COEFX4	COEFX3	COEFX2	COEFX1	COEFX0
11H	ASAY	COEFY7	COEFY6	COEFY5	COEFY4	COEFY3	COEFY2	COEFY1	COEFY0
12H	ASAZ	COEFZ7	COEFZ6	COEFZ5	COEFZ4	COEFZ3	COEFZ2	COEFZ1	COEFZ0
Reset		-	-	-	-	-	-	-	-

Sensitivity adjustment data for each axis is stored to fuse ROM on shipment.

ASAX[7:0]: Magnetic sensor X-axis sensitivity adjustment value
ASAY[7:0]: Magnetic sensor Y-axis sensitivity adjustment value
ASAZ[7:0]: Magnetic sensor Z-axis sensitivity adjustment value

<How to adjust sensitivity>

The sensitivity adjustment is done by the equation below;

$$Hadj = H \times \left(\frac{(ASA - 128) \times 0.5}{128} + 1 \right),$$

where *H* is the measurement data read out from the measurement data register, *ASA* is the sensitivity adjustment value, and *Hadj* is the adjusted measurement data.

9. Example of Recommended External Connection

9.1. I²C Bus Interface

<AK8975>

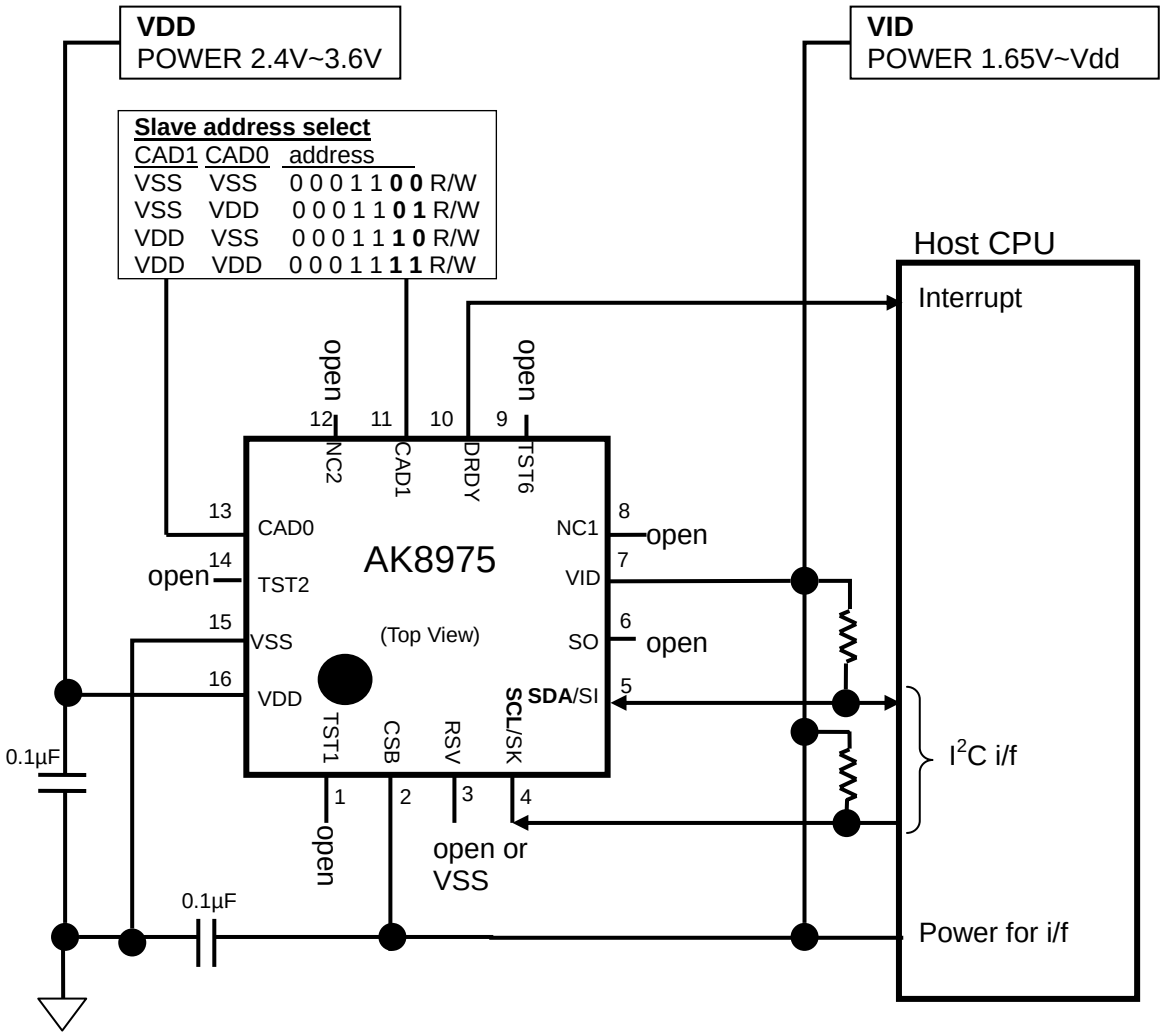

<AK8975C>

Same as AK8975

9.2. 4-wire SPI

<AK8975>

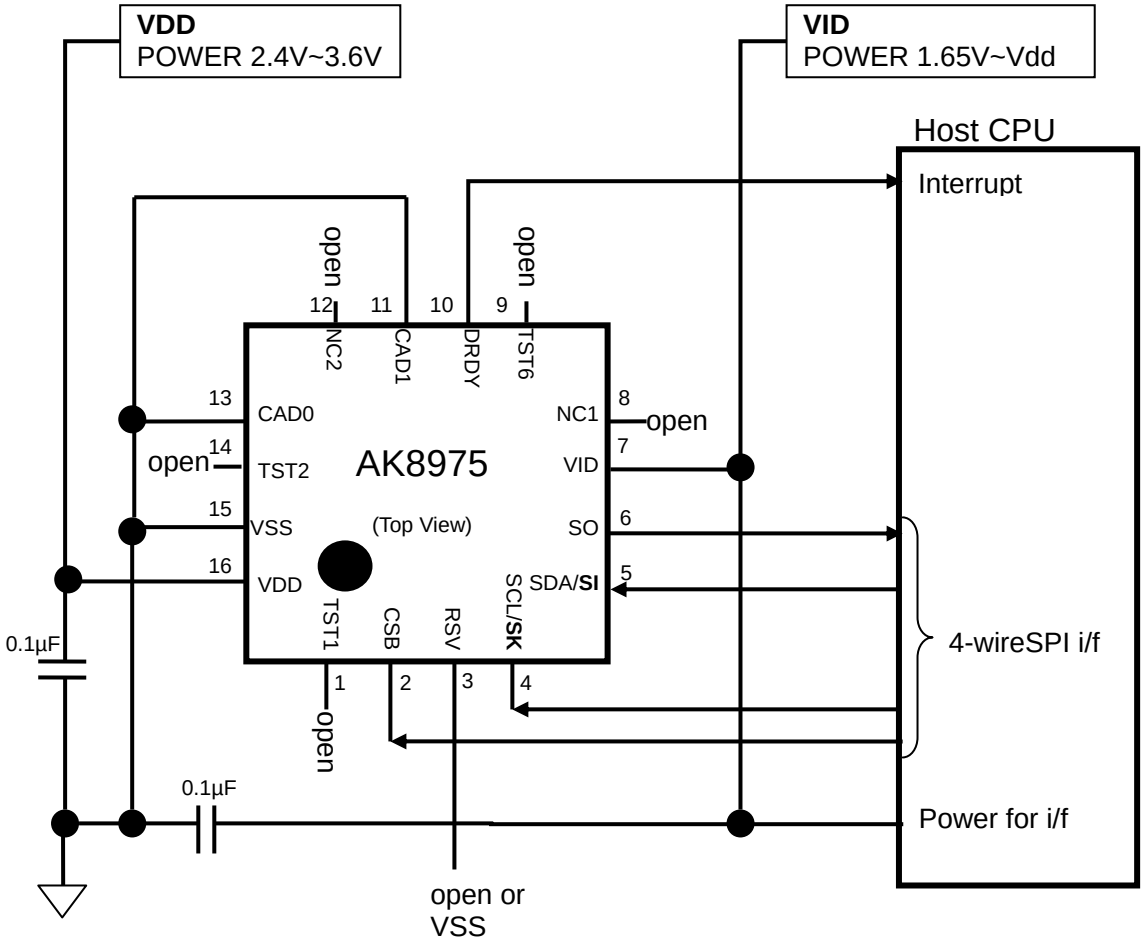

<AK8975C>

Same as AK8975

10. Package

10.1. Marking

<AK8975>

- Company logo: AKM
- Product name: 8975
- Date code: $X_1X_2X_3X_4X_5$
  - X_1 = ID
  - X_2 = Year code
  - X_3X_4 = Week code
  - X_5 = Lot

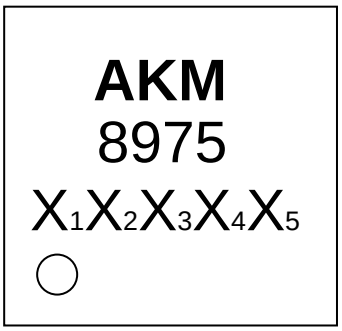

<Top view>

<AK8975C>

- Product name: 8975C
- Date code: $X_1X_2X_3X_4X_5$
  - X_1 = ID
  - X_2 = Year code
  - X_3X_4 = Week code
  - X_5 = Lot

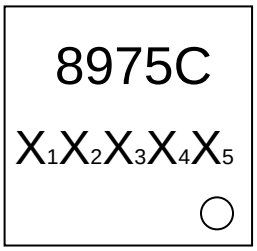

<Top view>

10.2. Pin Assignment

<AK8975>

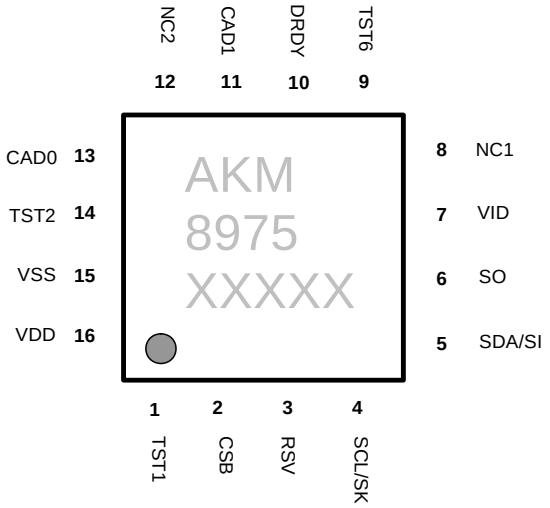

<Top view>

<AK8975C>

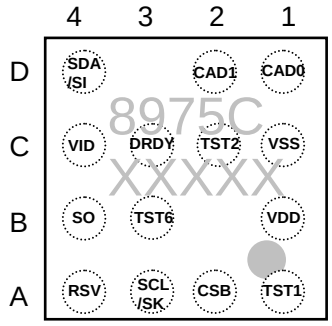

<Top view>

10.3. Outline Dimensions

<AK8975>

[mm]

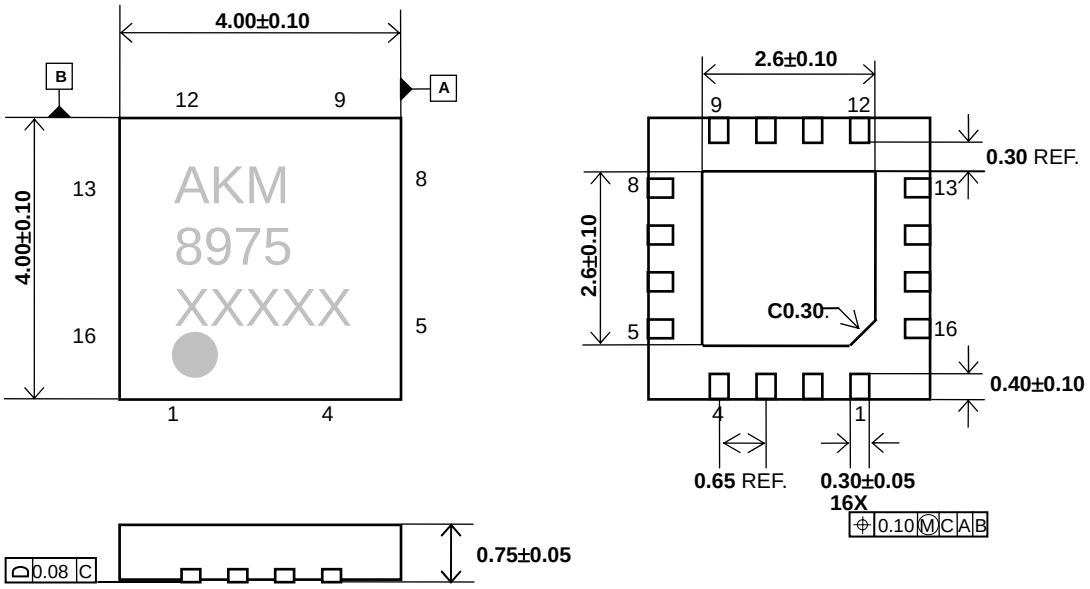

<AK8975C>

[mm]

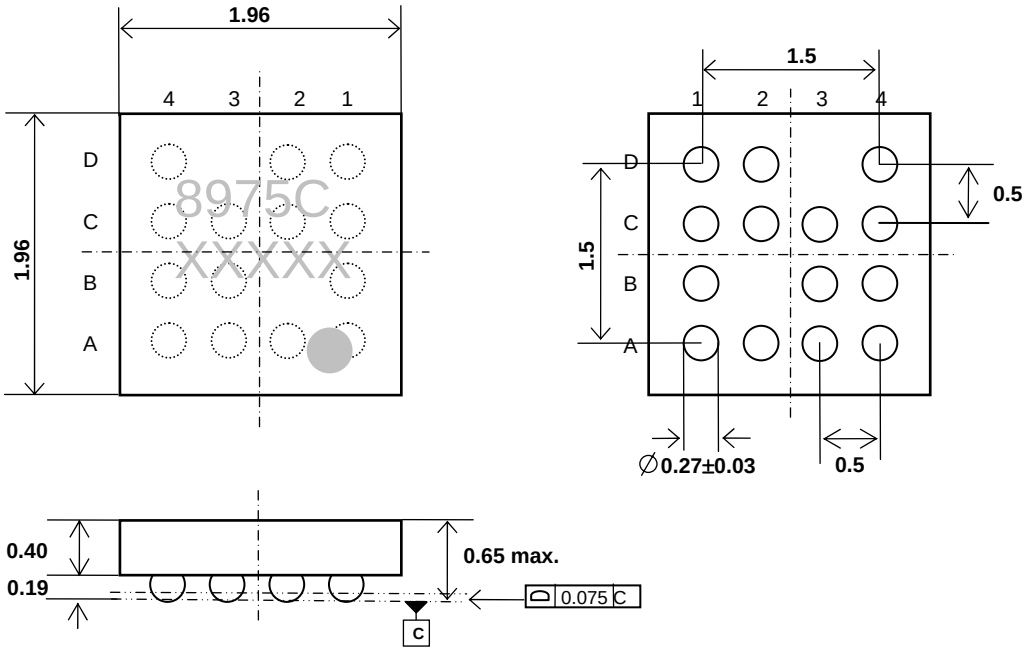

10.4. Recommended Foot Print Pattern

<AK8975>

[mm]

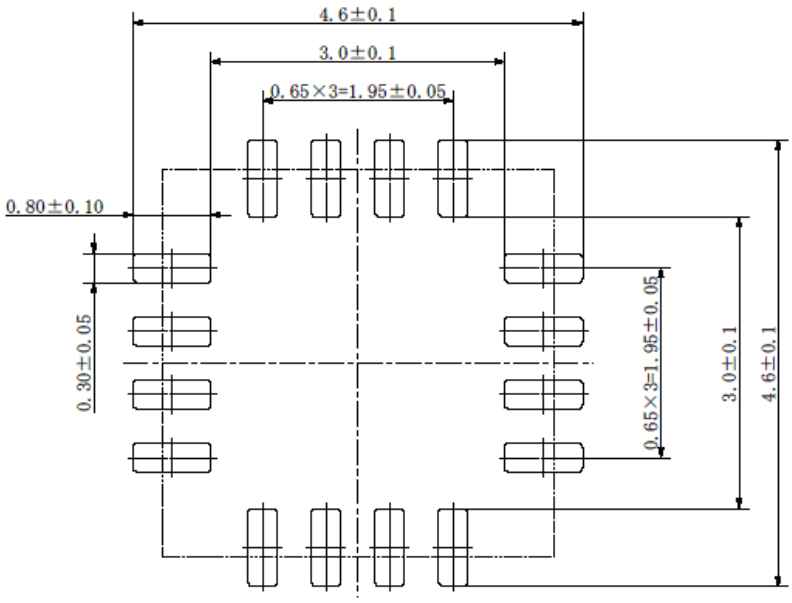

<AK8975C>

[mm]

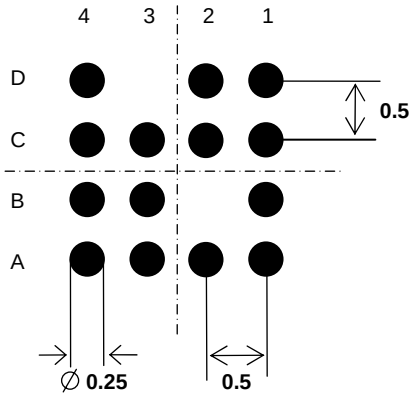

11. Relationship between the Magnetic Field and Output Code

The measurement data increases as the magnetic flux density increases in the arrow directions.

<AK8975>

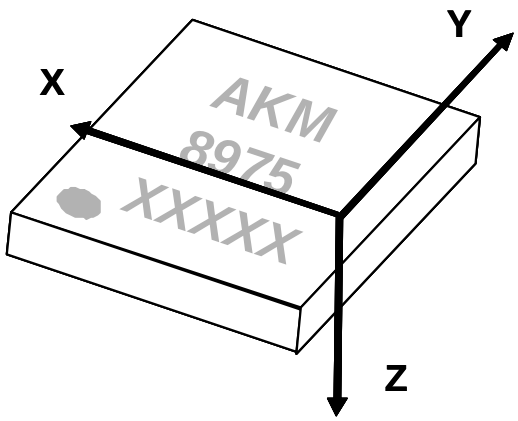

<AK8975C>

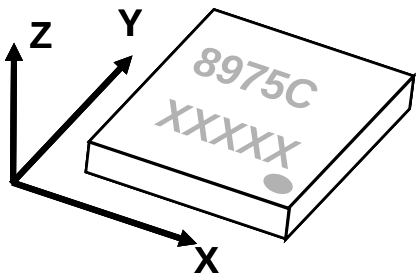

Important Notice

- These products and their specifications are subject to change without notice.
  When you consider any use or application of these products, please make inquiries the sales office of Asahi Kasei Microdevices Corporation (AKM) or authorized distributors as to current status of the products.
- AKM assumes no liability for infringement of any patent, intellectual property, or other rights in the application or use of any information contained herein.
- Any export of these products, or devices or systems containing them, may require an export license or other official approval under the law and regulations of the country of export pertaining to customs and tariffs, currency exchange, or strategic materials.
- AKM products are neither intended nor authorized for use as critical components$_{Note1)}$ in any safety, life support, or other hazard related device or system$_{Note2)}$, and AKM assumes no responsibility for such use, except for the use approved with the express written consent by Representative Director of AKM. As used here:
  Note1) A critical component is one whose failure to function or perform may reasonably be expected to result, whether directly or indirectly, in the loss of the safety or effectiveness of the device or system containing it, and which must therefore meet very high standards of performance and reliability.
  Note2) A hazard related device or system is one designed or intended for life support or maintenance of safety or for applications in medicine, aerospace, nuclear energy, or other fields, in which its failure to function or perform may reasonably be expected to result in loss of life or in significant injury or damage to person or property.
- It is the responsibility of the buyer or distributor of AKM products, who distributes, disposes of, or otherwise places the product with a third party, to notify such third party in advance of the above content and conditions, and the buyer or distributor agrees to assume any and all responsibility and liability for and hold AKM harmless from any and all claims arising from the use of said product in the absence of such notification.