● General Description

The AGM6N20D combines advanced trenchMOSFET technology with a low resistance package to provide extremely low $R_{DS(ON)}$.

This device is ideal for load switch and battery protection applications.

● Features

- Advance high cell density Trench technology
- Low $R_{DS(ON)}$ to minimize conductive loss
- Low Gate Charge for fast switching
- Low Thermal resistance
- 100% Avalanche tested
- 100% DVDS tested

● Application

- MB/VGA Vcore
- SMPS 2nd Synchronous Rectifier
- POL application
- BLDC Motor driver

Product Summary

BVDSS	RDSON	ID
200V	500mΩ	7.0A

TO-252 Pin Configuration

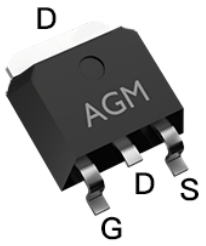

Top View

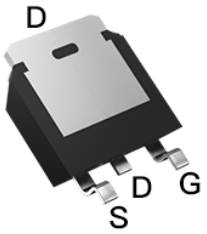

Bottom View

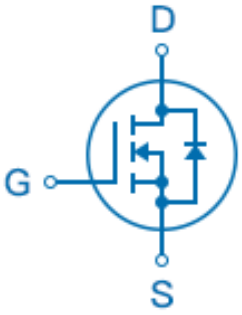

Package Marking and Ordering Information

Device Marking	Device	Device Package	Reel Size	Tape width	Quantity
AGM6N20D	AGM6N20D	TO-252	330mm	16mm	2500

Table 1. Absolute Maximum Ratings (TA=25℃)

Symbol	Parameter	Value	Unit
VDS	Drain-Source Voltage (VGS=0V)	200	V
VGS	Gate-Source Voltage (VDS=0V)	±20	V
ID	Drain Current-Continuous(Tc=25℃) **(Note 1)**	7.0	A
	Drain Current-Continuous(Tc=100℃)	4.2	A
IDM (pluse)	Drain Current-Pulsed **(Note 2)**	28	A
PD	Maximum Power Dissipation(Tc=25℃)	62.5	w
	Maximum Power Dissipation(Tc=100℃)	25	w
TJ,TSTG	Operating Junction and Storage Temperature Range	-55 To 150	℃

Table 2. Thermal Characteristic

Symbol	Parameter	Typ	Max	Unit
RθJA	Thermal Resistance Junction-ambient (Steady State)[1]	---	42	℃/W
RθJC	Thermal Resistance Junction-Case[1]	---	2.0	℃/W

Table 3. Electrical Characteristics (TJ=25℃unless otherwise noted)

Symbol	Parameter	Conditions	Min	Typ	Max	Unit
On/Off States						
BV_{DSS}	Drain-Source Breakdown Voltage	VGS=0V ID=250μA	200	--	--	V
IDSS	Zero Gate Voltage Drain Current	VDS=200V,VGS=0V	--	--	1	μA
IGSS	Gate-Body Leakage Current	VGS=±20V,VDS=0V	--	--	±100	nA
VGS(th)	Gate Threshold Voltage	VDS=VGS,ID=250μA	1.2	--	2.2	V
gFS	Forward Transconductance	VDS=5V,ID=3A	--	8	--	S
RDS(on)	Drain-Source On-State Resistance	VGS=10V, ID=4A	--	500	580	mΩ
		VGS=4.5V, ID=3A	--	460	540	mΩ
Dynamic Characteristics						
Ciss	Input Capacitance	VDS=25V,VGS=0V, F=1MHZ	--	580	--	pF
Coss	Output Capacitance		--	90	--	pF
Crss	Reverse Transfer Capacitance		--	3.0	--	pF
Rg	Gate resistance	VGS=0V, VDS=0V,f=1.0MHz	--	2.0	--	Ω
Switching Times						
td(on)	Turn-on Delay Time	VGS=10V,VDS=100V ID=2A,RGEN=2.5Ω	--	10	--	nS
tr	Turn-on Rise Time		--	12	--	nS
td(off)	Turn-Off Delay Time		--	15	--	nS
tf	Turn-Off Fall Time		--	15	--	nS
Qg	Total Gate Charge	VGS=10V, VDS=100V, ID=2A	--	12	--	nC
Qgs	Gate-Source Charge		--	2.5	--	nC
Qgd	Gate-Drain Charge		--	3.8	--	nC
Source-Drain Diode Characteristics						
ISD	Source-Drain Current(Body Diode)		--	--	7.0	A
VSD	Forward on Voltage	VGS=0V,IS=4A	--	--	1.2	V
trr	Reverse Recovery Time	Is=4A , dI/dt=100A/μs , TJ=25℃	--	50	--	ns
Qrr	Reverse Recovery Charge		--	98	--	nc

Notes 1.The maximum current rating is package limited.

Notes 2.Repetitive Rating: Pulse width limited by maximum junction temperature

Notes 3.EAS condition: TJ=25℃

Characteristics Curve:

Typ. Output Characteristics

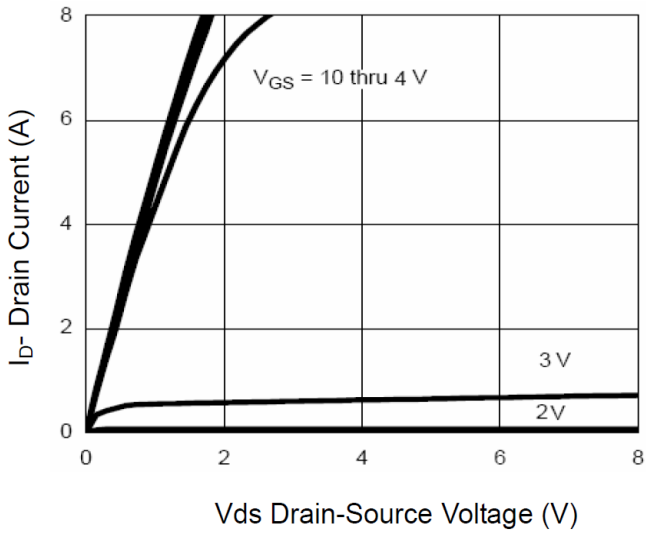

Transfer Characteristics

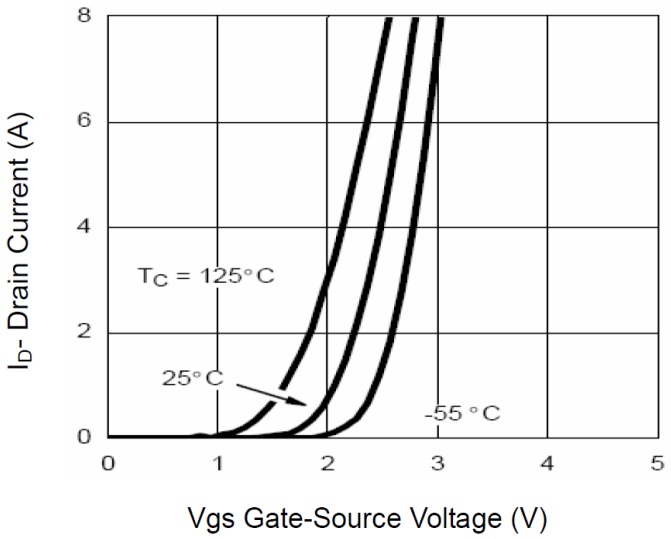

Rdson-Drain Current

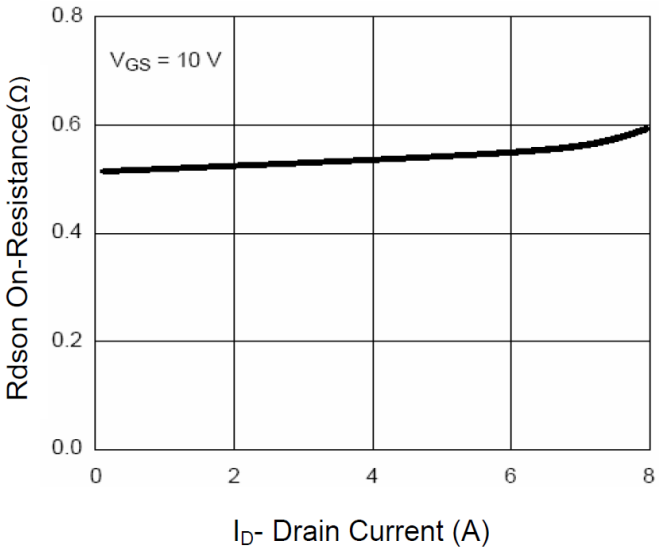

Rdson-Junction Temperature

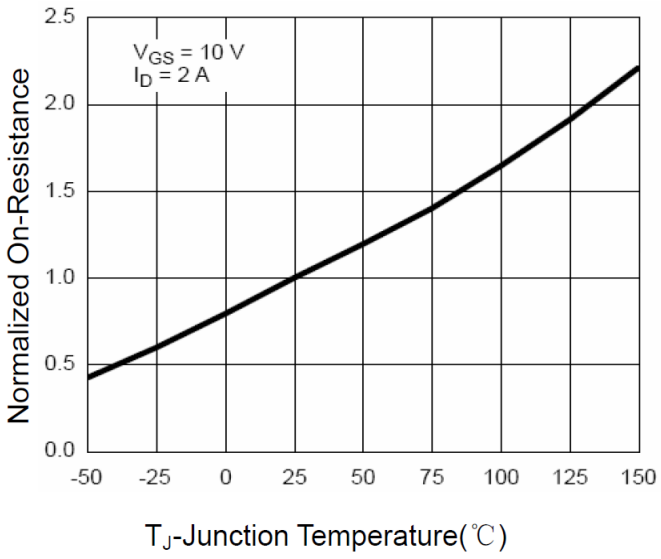

Gate Charge

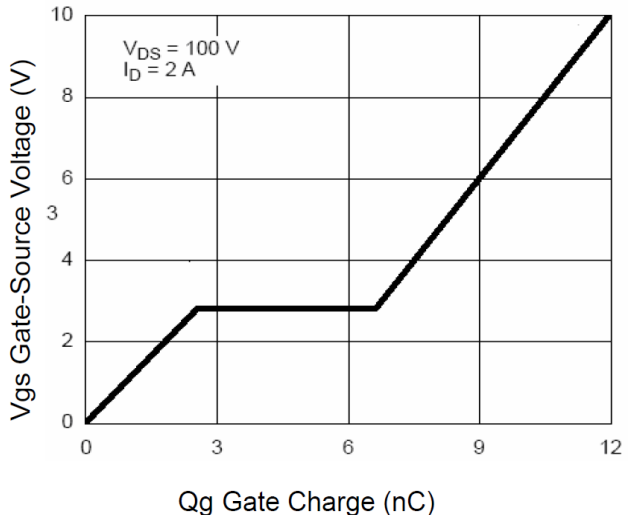

Source-Drain Diode Forward

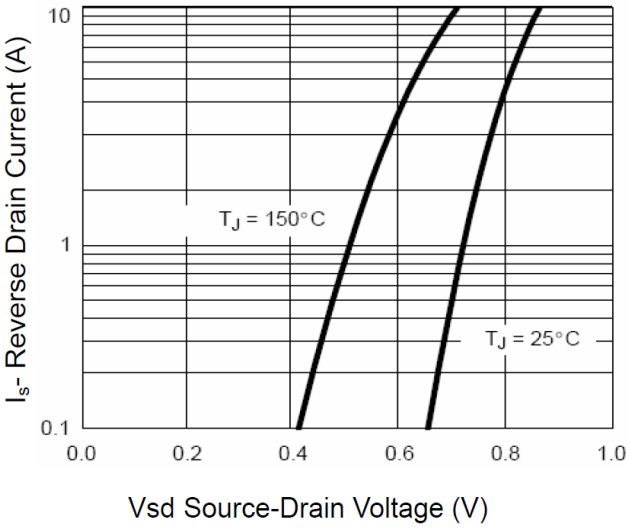

Capacitance

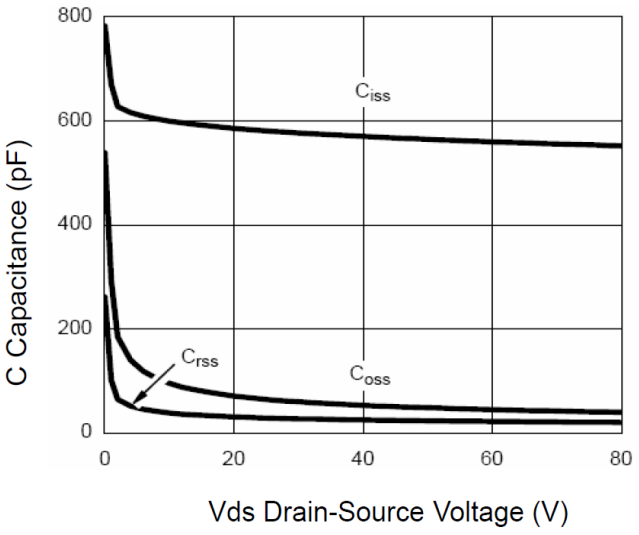

Safe Operating Area

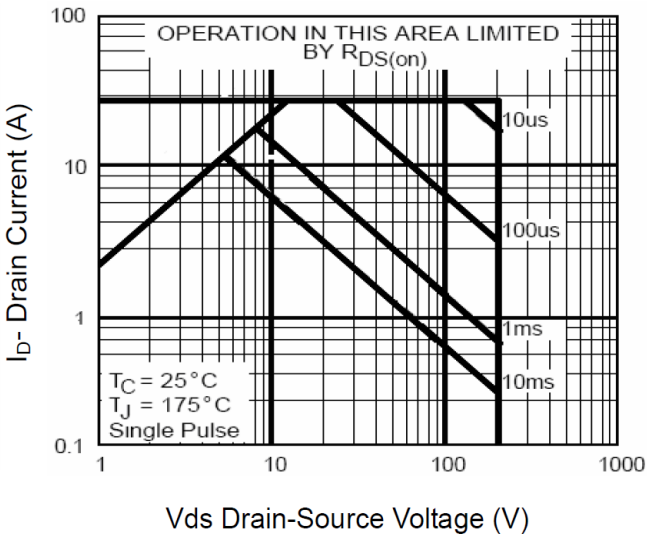

BVdss VS Junction Temperature

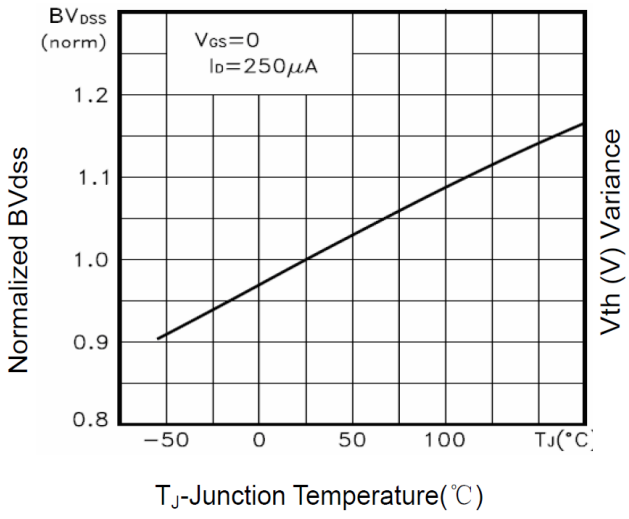

VGS vs Junction Temperature

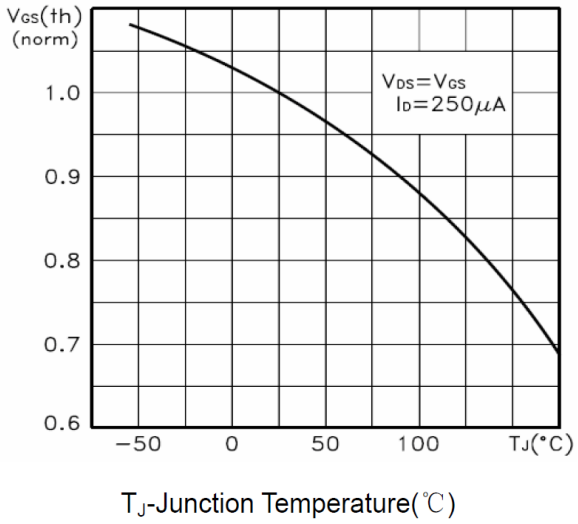

Max. transient thermal impedance

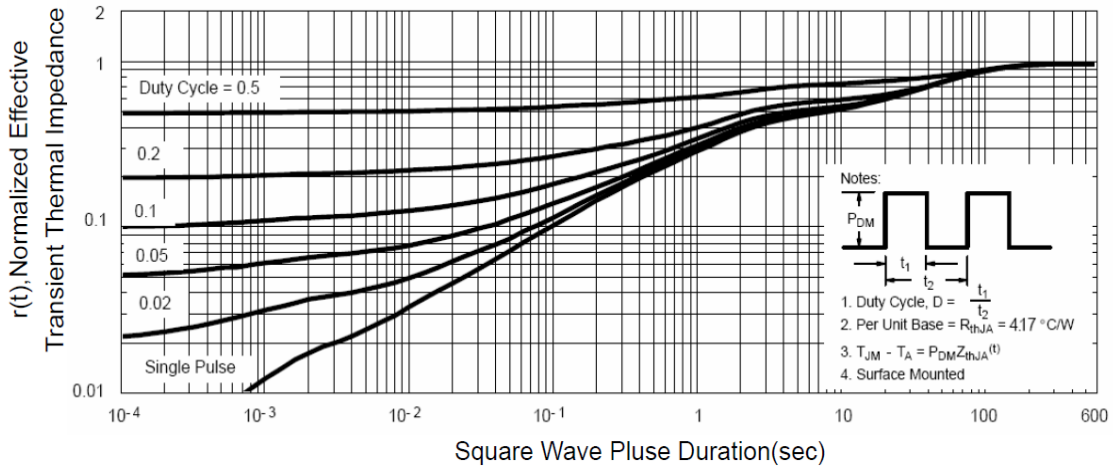

Test Circuit and Waveform:

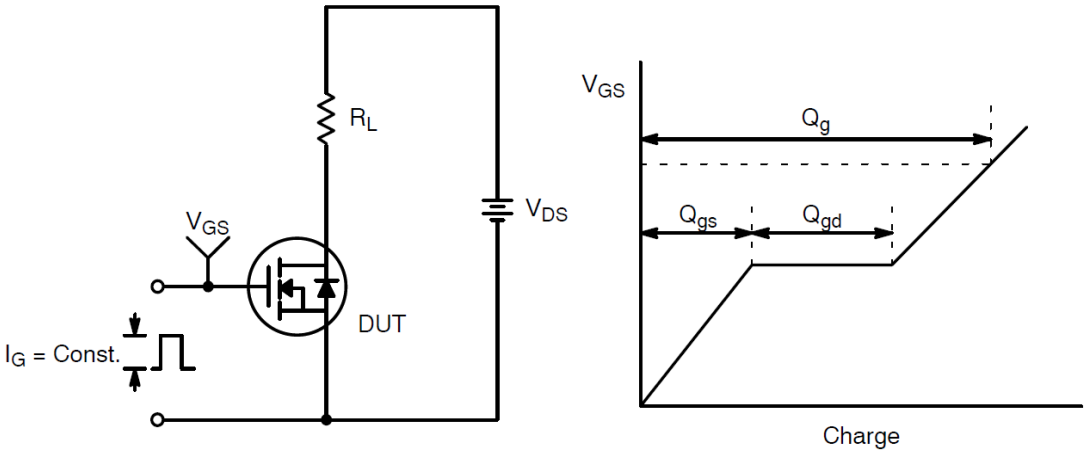

Gate Charge Test Circuit & Waveform

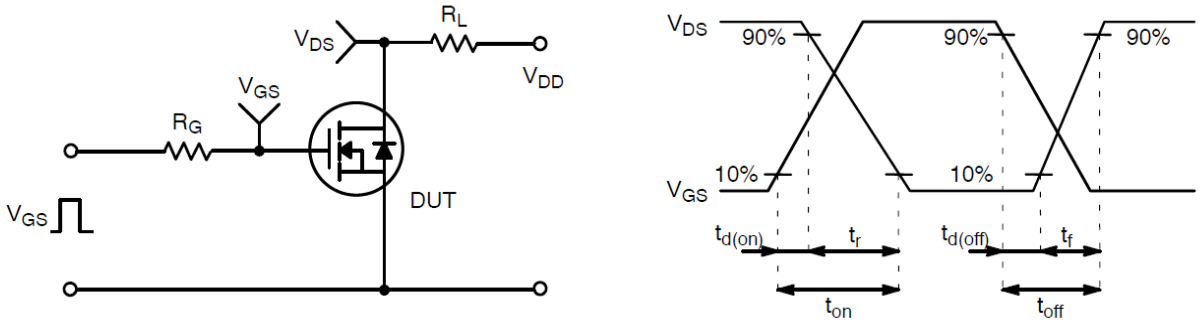

Resistive Switching Test Circuit & Waveforms

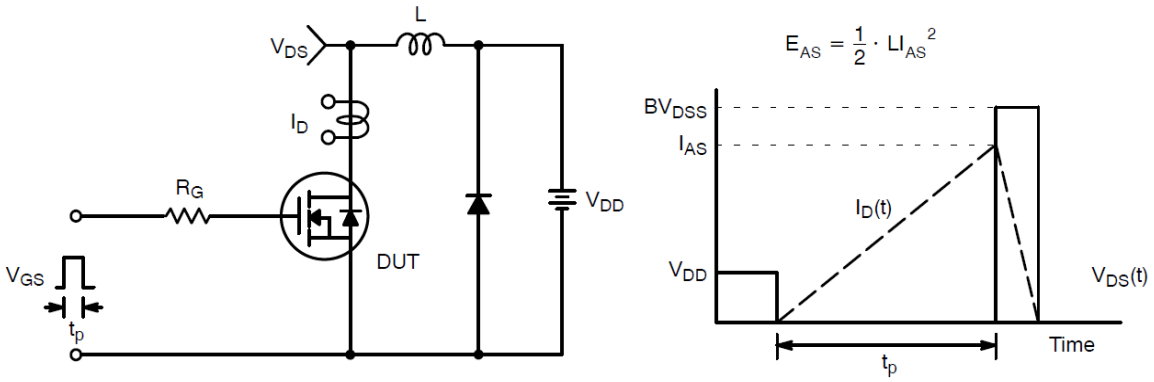

Unclamped Inductive Switching Test Circuit & Waveforms

●Dimensions（TO-252）

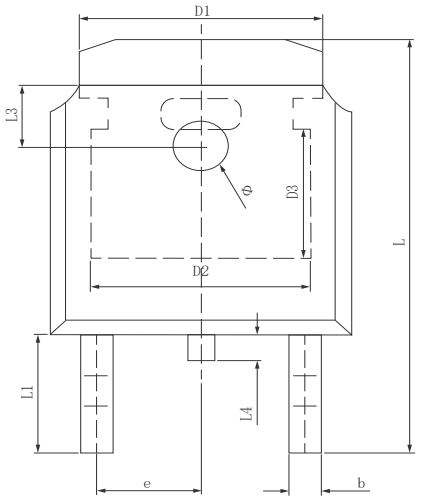

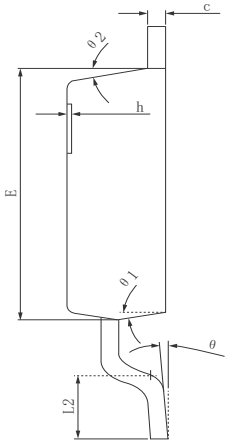

SYMBOL	MILLIMETER		
	MIN	Typ.	MAX
A	2.200	2.300	2.400
A1	0.000		0.127
b	0.640	0.690	0.740
c(电镀后)	0.460	0.520	0.580
D	6.500	6.600	6.700
D1	5.334 REF		
D2	4.826 REF		
D3	3.166 REF		
E	6.000	6.100	6.200
e	2.286 TYP		
h	0.000	0.100	0.200
L	9.900	10.100	10.300
L1	2.888 REF		
L2	1.400	1.550	1.700
L3	1.600 REF		
L4	0.600	0.800	1.000
Φ	1.100	1.200	1.300
θ	0°		8°
θ1	9° TYP		
θ2	9° TYP		

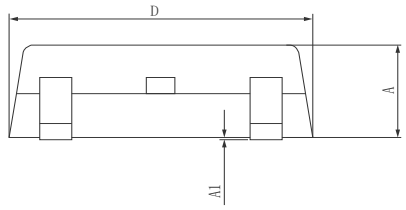

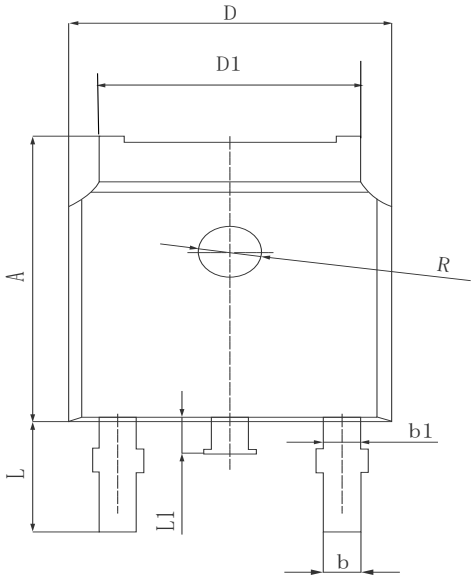

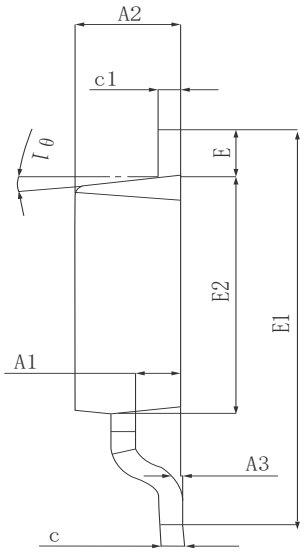

SYMBOL	MILLIMETER		
	MIN	NOM	MAX
A	7.050	7.100	7.150
A1	0.960	1.010	1.060
A2	2.250	2.300	2.350
A3	0.000	0.050	0.100
b	0.760REF.		
b1	1.000REF.		
c	0.508REF.		
c1	0.508REF.		
D	6.550	6.600	6.650
D1	5.220	5.320	5.420
E	0.950	1.000	1.050
E1	9.700	9.900	10.100
E2	6.050	6.100	6.150
e	2.286BSC		
e1	4.572REF.		
L	2.650	2.800	2.950
L1	0.700	0.800	0.900
θ1	7° REF.		
R	1.300REF.		
R1	0.250REF.		

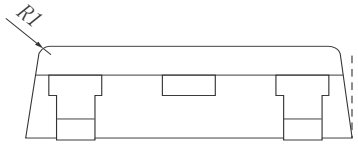

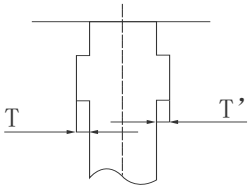

0<=T, T' <=0.12

DETALL A

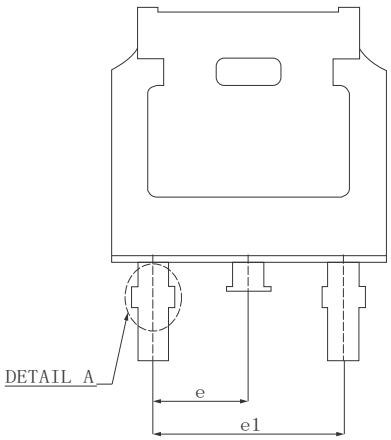

TO-252
Marking Instructions:

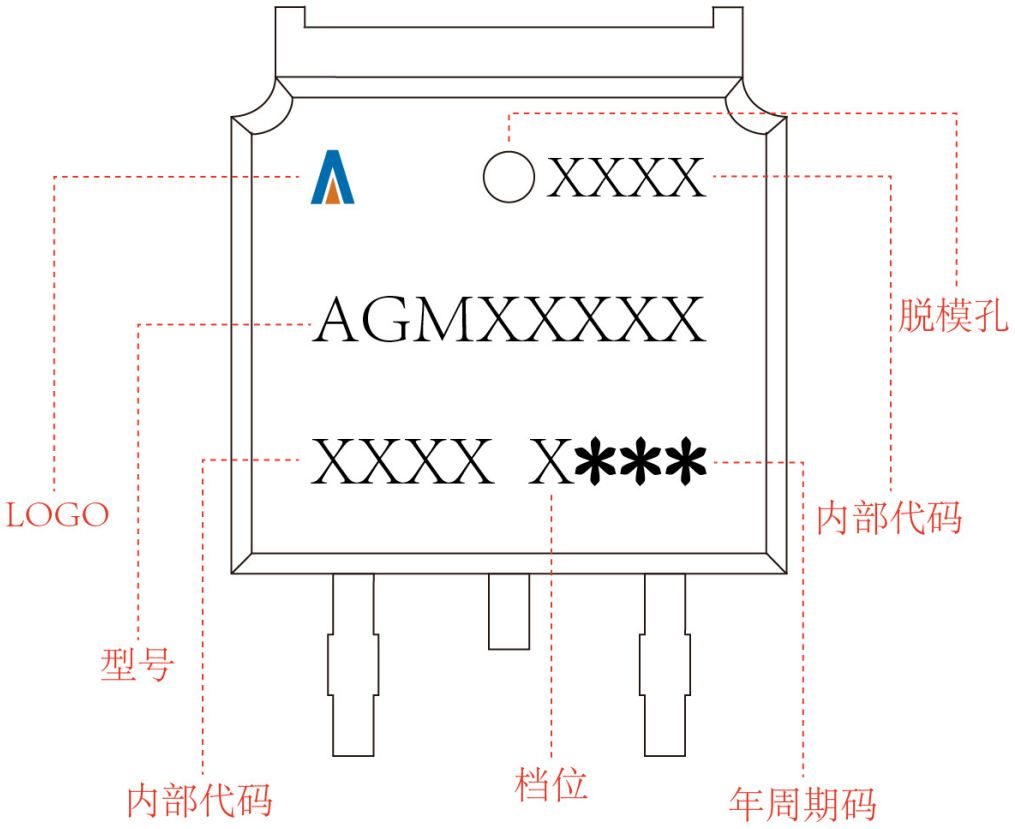

Disclaimer:

The information provided in this document is believed to be accurate and reliable. However,Shenzhen Core Control Source Electronics Technology Co., Ltd. does not assume any responsibility for the following consequences.Do not consider the use of such information or use beyond its scope.

The information mentioned in this document may be changed at any time without notice.

The products and information provided in this document do not infringe patents. Shenzhen Core Control Source Electronics Technology Co., Ltd. assumes no responsibility for any infringement of any other rights of third parties.The result of using such products and information.

This document is the third version issued on April 10th, 2024. This document replaces all previously provided information.

AGMSEMi It is a registered trademark of Shenzhen Core Control Source Electronics Technology Co., Ltd.

Copyright © 2017 Shenzhen Core Control Source Electronics Technology Co., Ltd. all rights reserved.