● General Description

The AGM40P150C combines advanced trench MOSFET technology with a low resistance package to provide extremely low $R_{DS(ON)}$.

This device is ideal for load switch and battery protection applications.

● Features

- ■ Advance high cell density Trench technology
- ■ Low $R_{DS(ON)}$ to minimize conductive loss
- ■Low Gate Charge for fast switching
- ■Low Thermal resistance
- ■100% Avalanche tested
- ■100% DVDS tested

● Application

- ■MB/VGA Vcore
- ■SMPS 2nd Synchronous Rectifier
- ■POL application
- ■BLDC Motor driver

Product Summary

BVDSS	RDSON	ID
-40V	3.0mΩ	-148A

TO-220 Pin Configuration

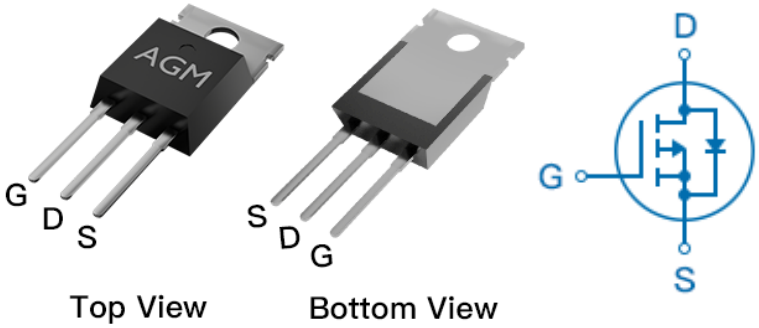

Package Marking and Ordering Information

Device Marking	Device	Device Package	Reel Size	Tape width	Quantity
AGM40P150C	AGM40P150C	TO-220	---	---	1000

Table 1. Absolute Maximum Ratings (TA=25℃)

Symbol	Parameter	Value	Unit
VDS	Drain-Source Voltage (VGS=0V)	-40	V
VGS	Gate-Source Voltage (VDS=0V)	±20	V
ID	Drain Current-Continuous(Tc=25℃) **(Note 1)**	-148	A
	Drain Current-Continuous(Tc=100℃)	-104	A
IDM (pluse)	Drain Current-Pulsed **(Note 2)**	-592	A
PD	Maximum Power Dissipation(Tc=25℃)	158	w
	Maximum Power Dissipation(Tc=100℃)	79	w
EAS	Avalanche energy **(Note 3)**	847	mJ
TJ,TSTG	Operating Junction and Storage Temperature Range	-55 To 175	℃

Table 2. Thermal Characteristic

Symbol	Parameter	Typ	Max	Unit
RθJA	Thermal Resistance Junction-ambient (Steady State)[1]	---	62	℃/W
RθJC	Thermal Resistance Junction-Case[1]	---	0.95	℃/W

Table 2. P-Channel Electrical Characteristics (TJ=25℃unless otherwisenoted)

Symbol	Parameter	Conditions	Min	Typ	Max	Unit
On/Off States						
BVDSS	Drain-Source Breakdown Voltage	VGS=0V ID=-250μA	-40	--	--	V
IDSS	Zero Gate Voltage Drain Current	VDS=-40V,VGS=0V	--	--	-1	μA
IGSS	Gate-Body Leakage Current	VGS=±40V,VDS=0V	--	--	±100	nA
VGS(th)	Gate Threshold Voltage	VDS=VGS,ID=-250μA	-1.2	--	-2.2	V
gFS	Forward Transconductance	VDS=-5V,ID=-15A	--	60	--	S
RDS(on)	Drain-Source On-State Resistance	VGS=-10V, ID=-20A	--	3.0	3.8	mΩ
		VGS=-4.5V, ID=-15A	--	4.0	5.6	mΩ
Dynamic Characteristics						
Ciss	Input Capacitance	VDS=-20V,VGS=0V, F=1MHZ	--	10733	--	pF
Coss	Output Capacitance		--	770	--	pF
Crss	Reverse Transfer Capacitance		--	697	--	pF
Rg	Gate resistance	VGS=0V, VDS=0V,f=1.0MHz	--	1.7	--	Ω
Switching Times						
td(on)	Turn-on Delay Time	VGS=-10V,VDS=-20V, RL=1Ω, RGEN=3.0Ω	--	19.6	--	nS
tr	Turn-on Rise Time		--	3.6	--	nS
td(off)	Turn-Off Delay Time		--	22.8	--	nS
tf	Turn-Off Fall Time		--	38	--	nS
Qg	Total Gate Charge	VGS=-10V, VDS=-20V, ID=-20A	--	195	--	nC
Qgs	Gate-Source Charge		--	24.1	--	nC
Qgd	Gate-Drain Charge		--	39.9	--	nC
Source-Drain Diode Characteristics						
ISD	Source-Drain Current(Body Diode)		--	--	-148	A
VSD	Forward on Voltage	VGS=0V,IS=-20A	--	--	-1.2	V
trr	Reverse Recovery Time	IF=-20A , dI/dt=100A/μs , TJ=25℃	--	51.1	--	ns
Qrr	Reverse Recovery Charge		--	125.2	--	nc

Notes 1.The maximum current rating is package limited.

Notes 2.Repetitive Rating: Pulse width limited by maximum junction temperature Notes

3.EAS condition: TJ=25℃,VDD=-30V,Vgs=-10V,ID=92A, L=0.2mH,RG=25ohm

Typical Electrical And Thermal Characteristics (Curves)

Figure 1. Output Characteristics

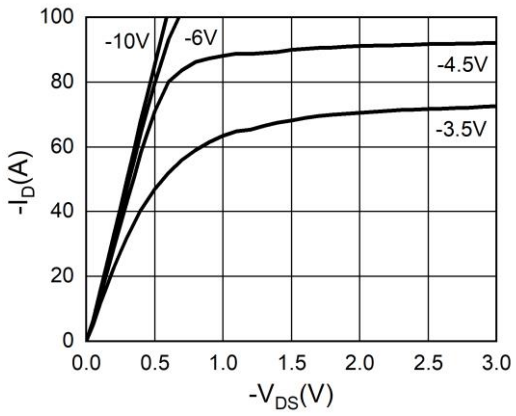

Figure 2. Transfer Characteristics

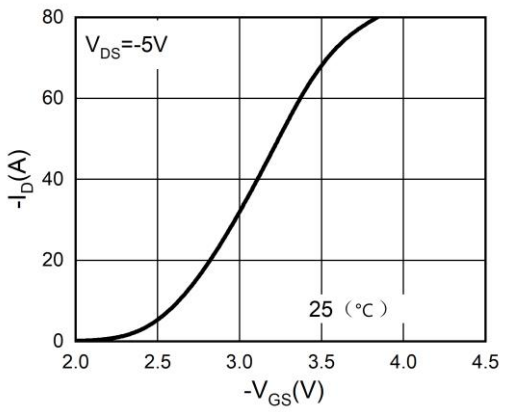

Figure 3. Power Dissipation

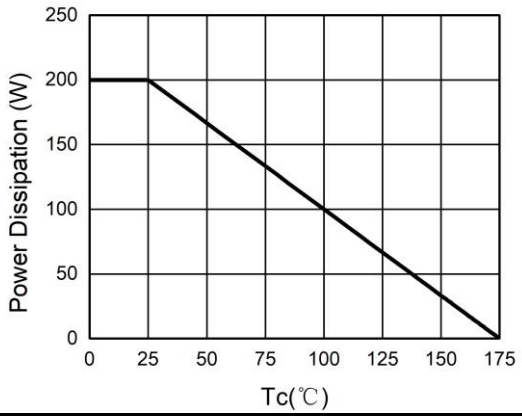

Figure 4. Drain Current

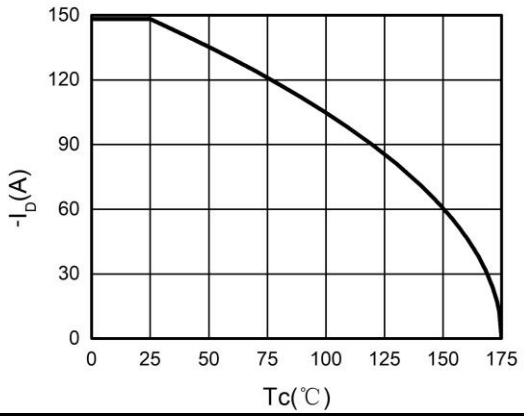

Figure 5. BV_{DSS} vs Junction Temperature

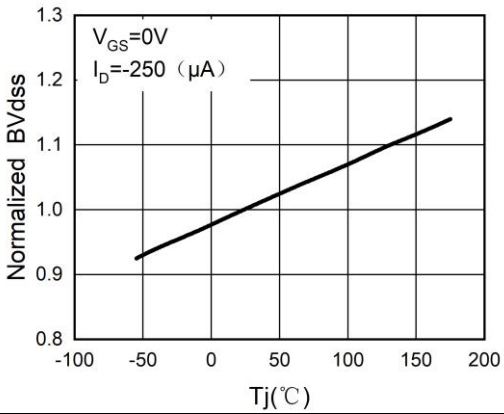

Figure 6. $R_{DS(ON)}$ vs Junction Temperature

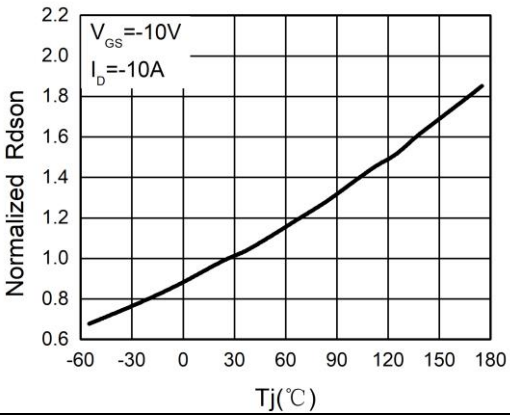

Typical Electrical And Thermal Characteristics (Curves)

Figure 7. Gate Charge Waveforms

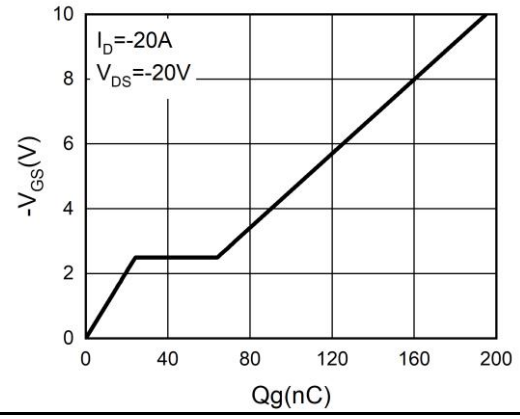

Figure 8. Capacitance

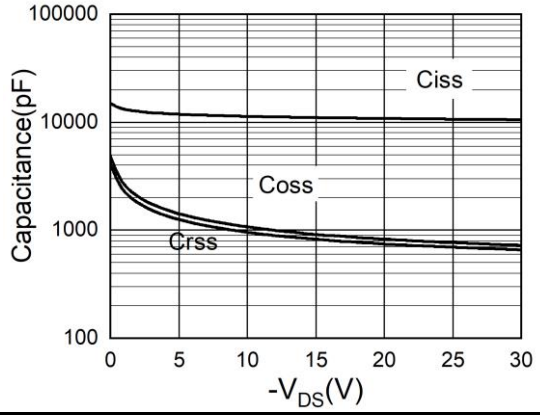

Figure 9. Body-Diode Characteristics

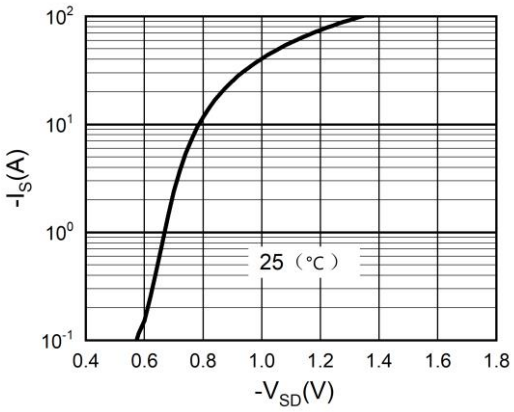

Figure 10. Maximum Safe Operating Area

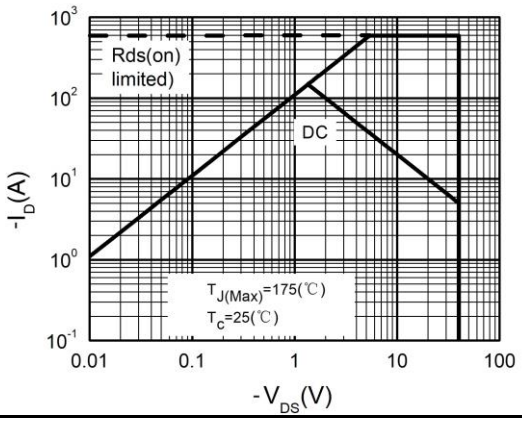

●Dimensions（TO-220）

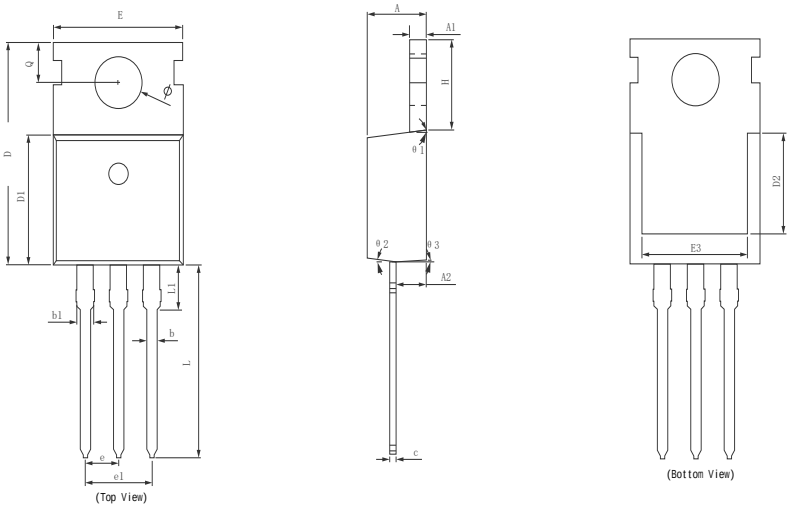

SYMBOL	MILLIMETER		
	MIN	Typ.	MAX
A	4.370	4.570	4.700
A1	1.250	1.300	1.400
A2	2.150	2.350	2.550
b	0.700	0.800	0.950
b1	1.170	1.270	1.470
c	0.450	0.500	0.600
D	15.100	15.600	16.100
D1	8.800	9.100	9.400
D2	5.500	6.300 REF	
E	9.700	10.000	10.300
E3	7.000	7.600 REF	
e	2.540 BSC		
e1	5.080 BSC		
L	13.200	13.500	13.800
L1		3.100	3.400
H	6.250	6.500	6.750
Φ	3.400	3.600	3.800
Q	2.600	2.800	3.000
θ1	7° TYP		
θ2	7° TYP		
θ3	3° TYP		

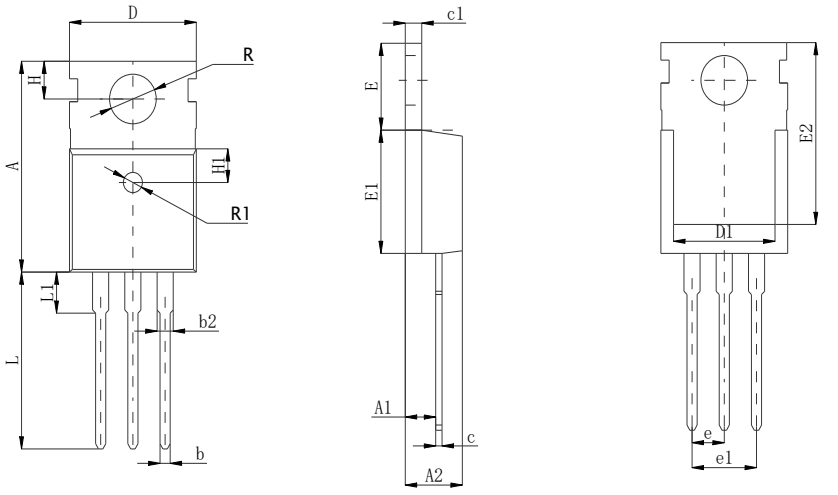

SYMBOL	MILLIMETER		
	MIN.	NOM.	MAX.
A	15.4	15.6	15.8
A1	2.35	2.40	2.55
A2	4.4	4.5	4.7
b	0.7	0.8	0.9
b2	1.18	1.31	1.44
c	0.48	0.5	0.56
c1	1.2	1.3	1.4
D	9.8	10	10.2
E	6.4	6.5	6.6
D1	8 REF		
E1	9	9.1	9.2
E2	13.5 REF		
e	2.54 BSC		
e1	5.08 BSC		
H	2.65	2.8	2.95
H1	2.4	2.5	2.6
L	13.02	13.37	13.72
L1	2.85	3.05	3.25
R	3.53	3.6	3.73
R1	1.4	1.5	1.6
θ	2.5° REF		

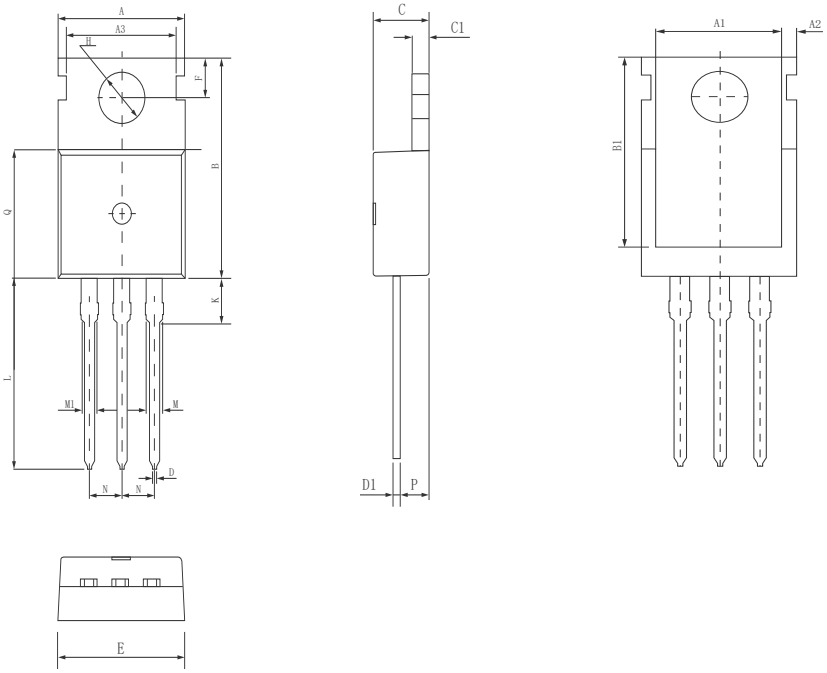

Symbol	Dimensions (mm)
A	10.0±0.3
A1	8.0±0.2
A2	0.94±0.1
A3	8.7±0.1
B	15.6±0.4
B1	13.2±0.2
C	4.5±0.2
C1	1.3±0.2
D	0.8±0.2
D1	0.5±0.1
E	10.0±0.3
F	2.8±0.1
H	3.6±0.1
K	3.1±0.2
L	13.2±0.4
M	1.38±0.1
M1	1.28±0.1
N	2.54 (typ)
P	2.4±0.3
Q	9.15±0.25

TO-220

Marking Instructions:

Model1:

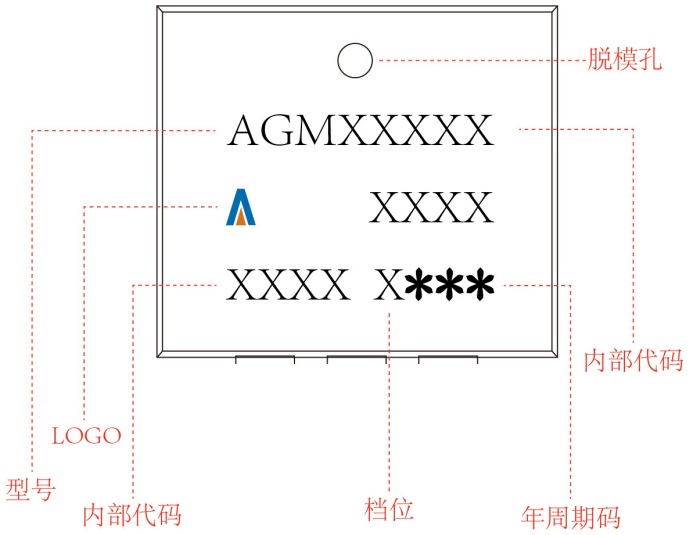

Model2:

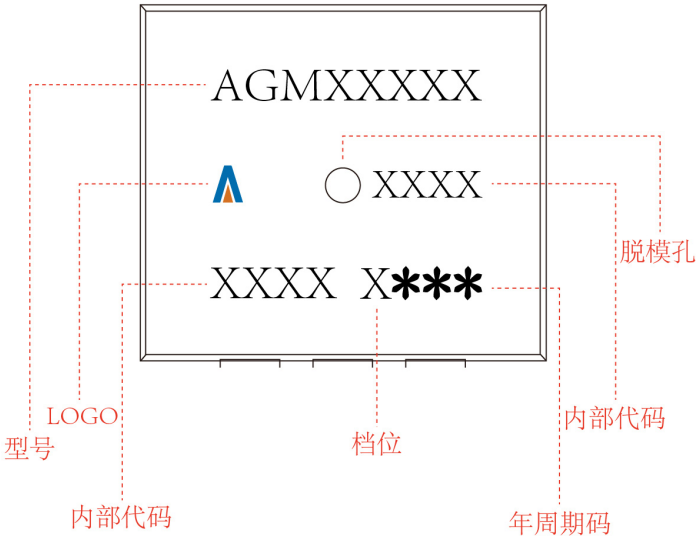

Disclaimer:

The information provided in this document is believed to be accurate and reliable. However,Shenzhen Core Control Source Electronics Technology Co., Ltd. does not assume any responsibility for the following consequences.Do not consider the use of such information or use beyond its scope.

The information mentioned in this document may be changed at any time without notice.

The products and information provided in this document do not infringe patents. Shenzhen Core Control Source Electronics Technology Co., Ltd. assumes no responsibility for any infringement of any other rights of third parties.The result of using such products and information.

This document is the third version issued on April 10th, 2025. This document replaces all previously provided information.

AGMSEMi It is a registered trademark of Shenzhen Core Control Source Electronics Technology Co., Ltd.

Copyright © 2017 Shenzhen Core Control Source Electronics Technology Co., Ltd. all rights reserved.