General Description

The AGM30P10S combines advanced trench MOSFET technology with a low resistance package to provide extremely low $R_{DS(ON)}$.

This device is ideal for load switch and battery protection applications.

Features

- Advance high cell density Trench technology
- Low $R_{DS(ON)}$ to minimize conductive loss
- Low Gate Charge for fast switching
- Low Thermal resistance
- 100% Avalanche tested
- 100% DVDS tested

Application

- MB/VGA Vcore
- SMPS 2nd Synchronous Rectifier
- POL application
- BLDC Motor driver

Product Summary

BVDSS	RDSON	ID
-30V	12mΩ	-14A

SOP8 Pin Configuration

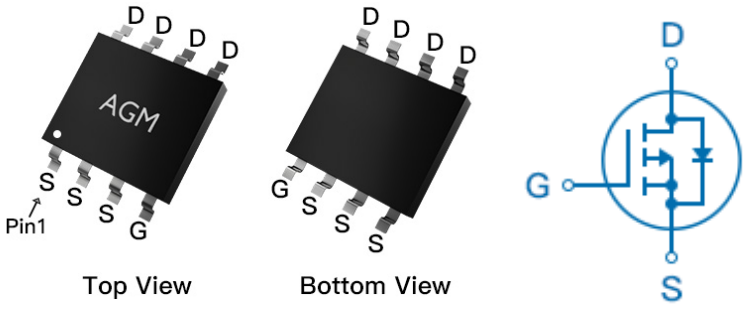

Package Marking and Ordering Information

Device Marking	Device	Device Package	Reel Size	Tape width	Quantity
AGM30P10S	AGM30P10S	SOP8	330mm	12mm	3000

Table 1. Absolute Maximum Ratings (TA=25℃)

Symbol	Parameter	Value	Unit
VDS	Drain-Source Voltage (VGS=0V)	-30	V
VGS	Gate-Source Voltage (VDS=0V)	±20	V
ID	Drain Current-Continuous(TA=25℃) **(Note 1)**	-14	A
	Drain Current-Continuous(TA=100℃)	-8.4	A
IDM (pluse)	Drain Current-Pulsed **(Note 2)**	-56	A
PD	Maximum Power Dissipation(TA=25℃)	2.5	w
	Maximum Power Dissipation(TA=100℃)	1.0	w
EAS	Avalanche energy **(Note 3)**	132	mJ
TJ,TSTG	Operating Junction and Storage Temperature Range	-55 To 150	℃

Table 2. Thermal Characteristic

Symbol	Parameter	Typ	Max	Unit
RθJA	Thermal Resistance Junction-ambient (Steady State)[1]	---	50	℃/W

Table 3. Electrical Characteristics (TJ=25℃unless otherwise noted)

Symbol	Parameter	Conditions	Min	Typ	Max	Unit
On/Off States						
BVDSS	Drain-Source Breakdown Voltage	VGS=0V ID=250μA	-30	--	--	V
IDSS	Zero Gate Voltage Drain Current	VDS=-30V,VGS=0V	--	--	-1.0	μA
IGSS	Gate-Body Leakage Current	VGS=±20V,VDS=0V	--	--	±100	nA
VGS(th)	Gate Threshold Voltage	VDS=VGS,ID=-250μA	-1.2	--	-2.2	V
gFS	Forward Transconductance	VDS=-5V,ID=-5A	--	9	--	S
RDS(on)	Drain-Source On-State Resistance	VGS=-10V, ID=-10A	--	12	16	mΩ
		VGS=-4.5V, ID=-5A	--	18	23	mΩ
Dynamic Characteristics						
Ciss	Input Capacitance	VDS=-15V, VGS=0V F=1MHZ	--	1650	--	pF
Coss	Output Capacitance		--	330	--	pF
Crss	Reverse Transfer Capacitance		--	220	--	pF
Rg	Gate resistance	VGS=0V, VDS=0V,f=1.0MHz	--	--	--	Ω
Switching Times						
td(on)	Turn-on Delay Time	VGS=-10V,VDS=-15V, ID=-8A,RGEN=3Ω	--	20	--	nS
tr	Turn-on Rise Time		--	15	--	nS
td(off)	Turn-Off Delay Time		--	60	--	nS
tf	Turn-Off Fall Time		--	11	--	nS
Qg	Total Gate Charge	VGS=-25V VDS=-10V, ID=-8A	--	15	--	nC
Qgs	Gate-Source Charge		--	4.0	--	nC
Qgd	Gate-Drain Charge		--	6.0	--	nC
Source-Drain Diode Characteristics						
ISD	Source-Drain Current(Body Diode)		--	--	-14	A
VSD	Forward on Voltage	VGS=0V,IS=-10A	--	--	-1.2	V
trr	Reverse Recovery Time	IF=-10A , dI/dt=100A/μs , TJ=25℃	--	--	--	ns
Qrr	Reverse Recovery Charge		--	--	--	nc

Notes 1.The maximum current rating is package limited.

Notes 2.Repetitive Rating: Pulse width limited by maximum junction temperature

Notes 3.EAS condition: TJ=25℃ , VDD=-15V,Vgs=-10V,ID=23A,L=0.5mH,RG=25ohm

Fig.1 Power Dissipation Derating Curve

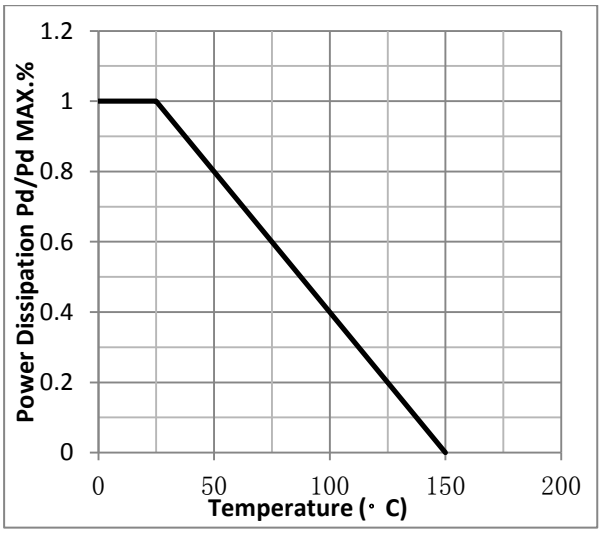

Fig.2 Typical output Characteristics

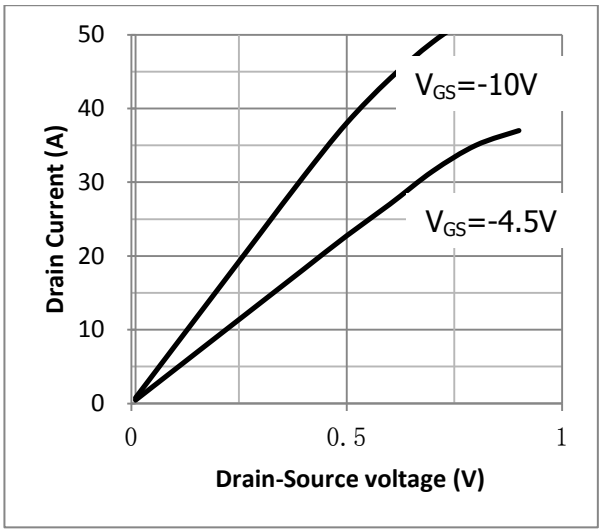

Fig.3 Threshold Voltage V.S Junction Temperature

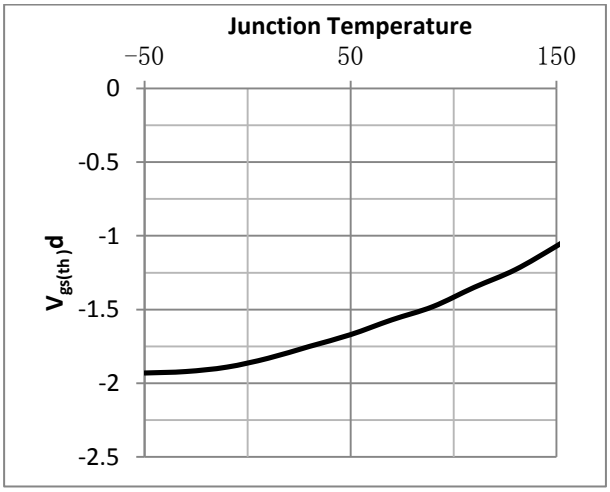

Fig.4 Resistance V.S Drain Current

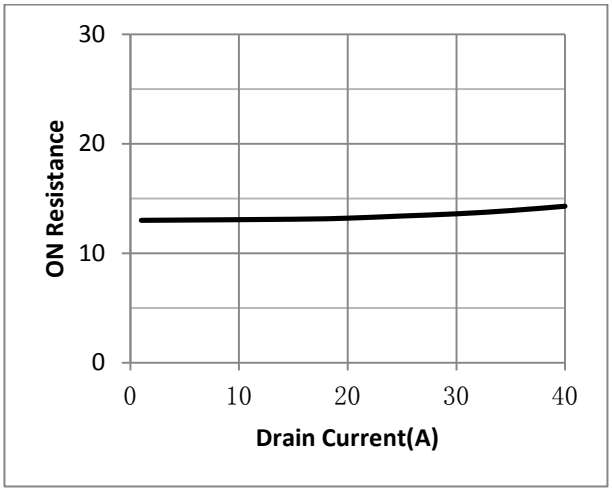

Fig.5 On-Resistance VS Gate Source Voltage

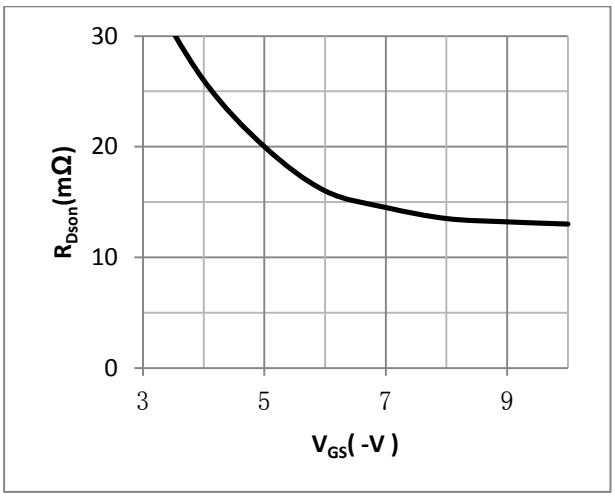

Fig.6 On-Resistance V.S Junction Temperature

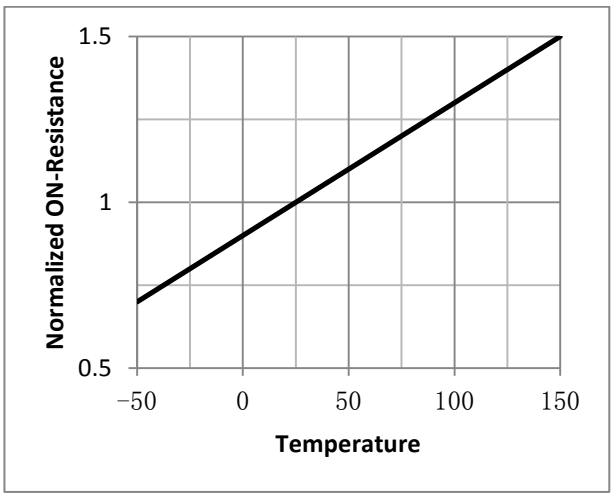

Fig.7 Switching Time Measurement Circuit

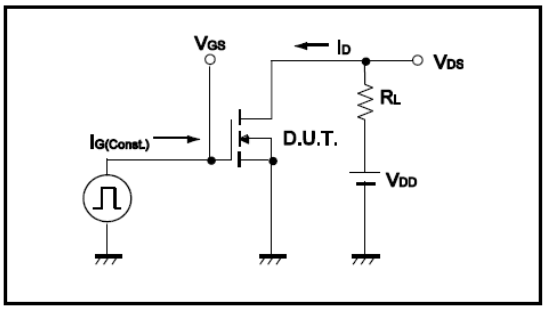

Fig.8 Gate Charge Waveform

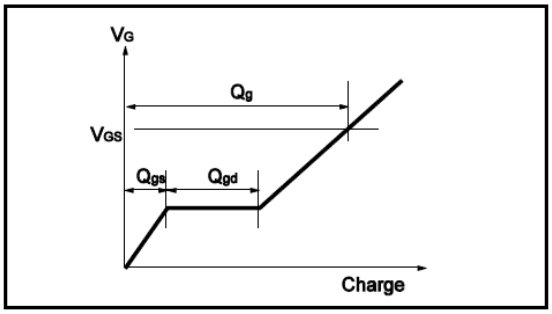

Fig.9 Switching Time Measurement Circuit

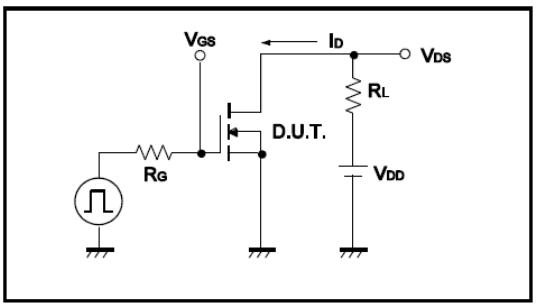

Fig.10 Gate Charge Waveform

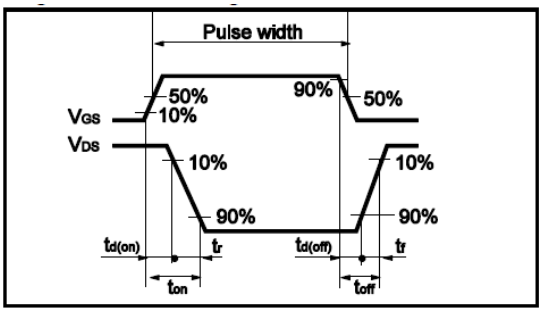

Fig.11 Avalanche Measurement Circuit

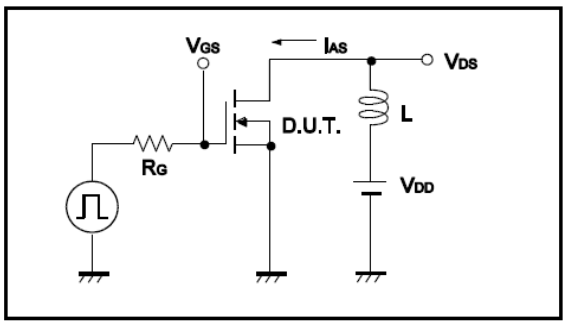

Fig.12 Avalanche Waveform

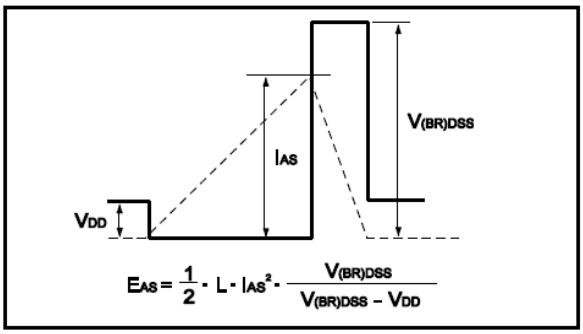

●Dimensions（SOP8）

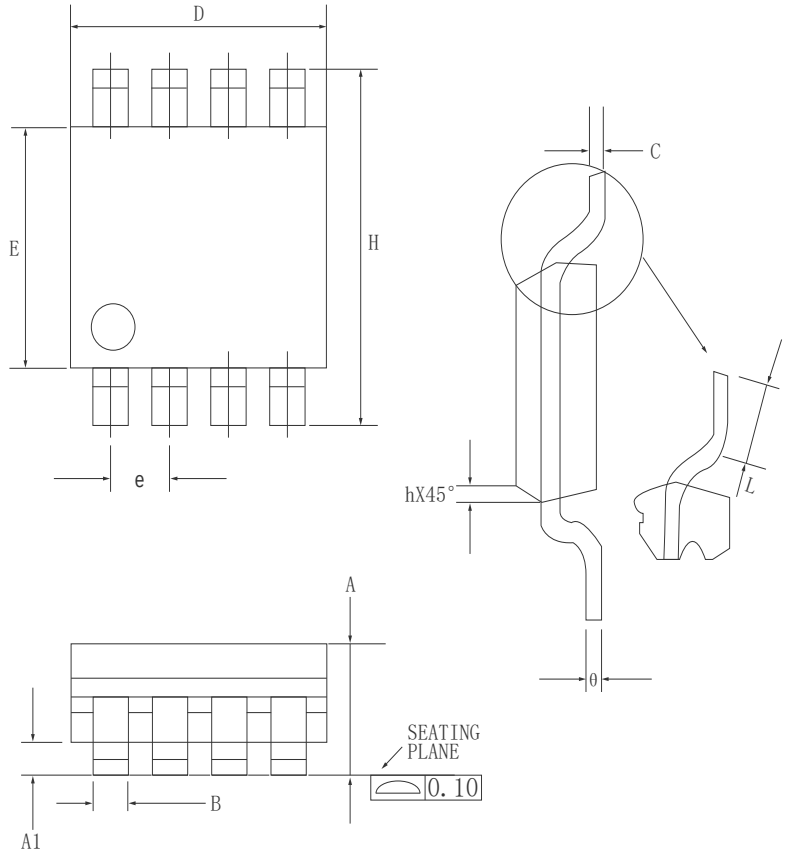

DIM	MILLIMETERRS	
	MIN	MAX
A	1.35	1.75
A1	0.02	0.15
B	0.33	0.5
C	0.1	0.25
D	4.8	5
E	3.8	4
e	1.27(BSC)	
H	5.8	6.2
h	0.25	0.5
I	0.4	1.25
θ	0°	7°

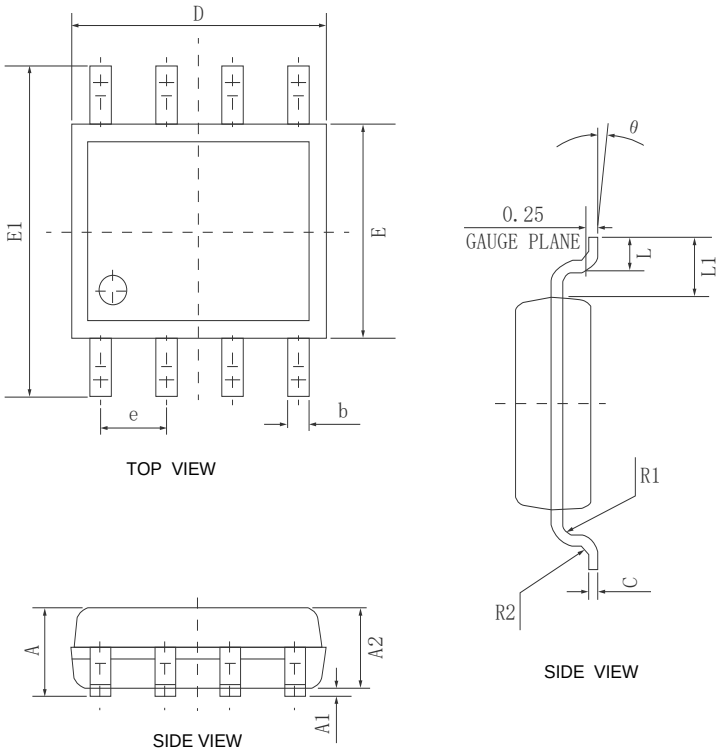

SYMBOL	MIN	NOM	MAX
A	1.40	1.60	1.80
A1	0.05	0.15	0.25
A2	1.35	1.45	1.55
b	0.30	0.40	0.50
c	0.153	0.203	0.253
D	4.80	4.90	5.00
E	3.80	3.90	4.00
E1	5.80	6.00	6.20
L	0.45	0.70	1.00
θ	2°	4°	6°
L1	1.04 REF		
e	1.27 BSC		
R1	0.07 TYP		
R2	0.07 TYP		

SOP8
Marking Instructions:

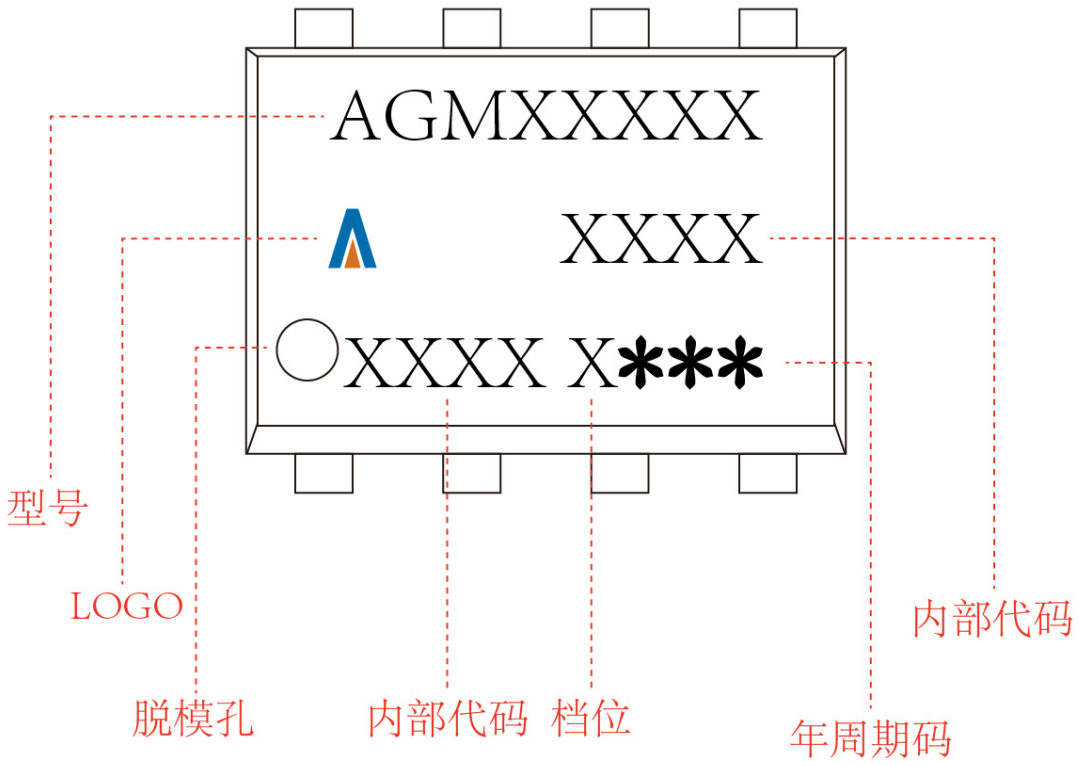

Disclaimer:

The information provided in this document is believed to be accurate and reliable. However,Shenzhen Core Control Source Electronics Technology Co., Ltd. does not assume any responsibility for the following consequences.Do not consider the use of such information or use beyond its scope.

The information mentioned in this document may be changed at any time without notice.

The products and information provided in this document do not infringe patents. Shenzhen Core Control Source Electronics Technology Co., Ltd. assumes no responsibility for any infringement of any other rights of third parties.The result of using such products and information.

This document is the fifth version issued on March 10th, 2024. This document replaces all previously provided information.

AGMSEMi It is a registered trademark of Shenzhen Core Control Source Electronics Technology Co., Ltd.

Copyright © 2017 Shenzhen Core Control Source Electronics Technology Co., Ltd. all rights reserved.