General Description

The AGM150P10AP combines advanced trench MOSFET technology with a low resistance package to provide extremely low $R_{DS(ON)}$.

This device is ideal for load switch and battery protection applications.

Features

- Advance high cell density Trench technology
- Low $R_{DS(ON)}$ to minimize conductive loss
- Low Gate Charge for fast switching
- Low Thermal resistance
- 100% Avalanche tested
- 100% DVDS tested

Application

- MB/VGA Vcore
- SMPS 2nd Synchronous Rectifier
- POL application
- BLDC Motor driver

Product Summary

BVDSS	RDSON	ID
-100V	112mΩ	-16A

PDFN3.3*3.3 Pin Configuration

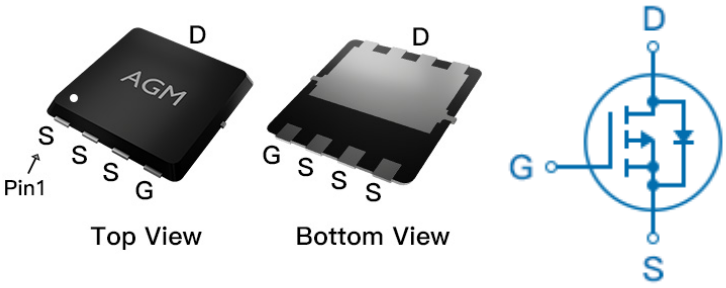

Package Marking and Ordering Information

Device Marking	Device	Device Package	Reel Size	Tape width	Quantity
AGM150P10	AGM150P10AP	PDFN3.3*3.3	330mm	12mm	5000

Table 1. Absolute Maximum Ratings (TA=25℃)

Symbol	Parameter	Value	Unit
VDS	Drain-Source Voltage (VGS=0V)	-100	V
VGS	Gate-Source Voltage (VDS=0V)	±20	V
ID	Drain Current-Continuous(Tc=25℃) **(Note 1)**	-16	A
	Drain Current-Continuous(Tc=100℃)	-10.7	A
IDM (pluse)	Drain Current-Pulsed **(Note 2)**	-64	A
PD	Maximum Power Dissipation(Tc=25℃)	69	w
	Maximum Power Dissipation(Tc=100℃)	27.8	w
EAS	Avalanche energy **(Note 3)**	72	mJ
TJ,TSTG	Operating Junction and Storage Temperature Range	-55 To 150	℃

Table 2. Thermal Characteristic

Symbol	Parameter	Typ	Max	Unit
RθJA	Thermal Resistance Junction-ambient (Steady State)[1]	---	50	℃/W
RθJC	Thermal Resistance Junction-Case[1]	---	1.8	℃/W

Table 3. Electrical Characteristics (TJ=25℃unless otherwise noted)

Symbol	Parameter	Conditions	Min	Typ	Max	Unit
On/Off States						
BVDSS	Drain-Source Breakdown Voltage	VGS=0V ID=250μA	-100	--	--	V
IDSS	Zero Gate Voltage Drain Current	VDS=-100V,VGS=0V	--	--	-1.0	μA
IGSS	Gate-Body Leakage Current	VGS=±20V,VDS=0V	--	--	±100	nA
VGS(th)	Gate Threshold Voltage	VDS=VGS,ID=-250μA	-1.2	--	-2.2	V
gFS	Forward Transconductance	VDS=-5V,ID=-3A	--	9.0	--	S
RDS(on)	Drain-Source On-State Resistance	VGS=-10V, ID=-5A	--	112	150	mΩ
		VGS=-4.5V, ID=-3A	--	128	165	mΩ
Dynamic Characteristics						
Ciss	Input Capacitance	VDS=-50V,VGS=0V F=1MHZ	--	700	--	pF
Coss	Output Capacitance		--	56	--	pF
Crss	Reverse Transfer Capacitance		--	8.6	--	pF
Rg	Gate resistance	VGS=0V, VDS=0V,f=1.0MHz	--	18	--	Ω
Switching Times						
td(on)	Turn-on Delay Time	VGS=-10V,VDS=-50V, ID=-5A,RGEN=5Ω	--	5.9	--	nS
tr	Turn-on Rise Time		--	3.7	--	nS
td(off)	Turn-Off Delay Time		--	39.5	--	nS
tf	Turn-Off Fall Time		--	25	--	nS
Qg	Total Gate Charge	VGS=-10V, VDS=-50V, ID=-5A	--	13	--	nC
Qgs	Gate-Source Charge		--	2.0	--	nC
Qgd	Gate-Drain Charge		--	2.3	--	nC
Source-Drain Diode Characteristics						
ISD	Source-Drain Current(Body Diode)		--	--	-16	A
VSD	Forward on Voltage	VGS=0V,IS=-5A	--	--	-1.2	V
trr	Reverse Recovery Time	IF=-5A , dI/dt=100A/μs , TJ=25℃	--	21	--	ns
Qrr	Reverse Recovery Charge		--	23	--	nc

Notes 1.The maximum current rating is package limited.

Notes 2.Repetitive Rating: Pulse width limited by maximum junction temperature

Notes 3.EAS condition: TJ=25℃,VDD=-50V,Vgs=-10V，ID=-17A,L=0.5mH,RG=25ohm

Gate Threshold Voltage
$-V_{TH}=f(T_j)$; I_D=-250uA

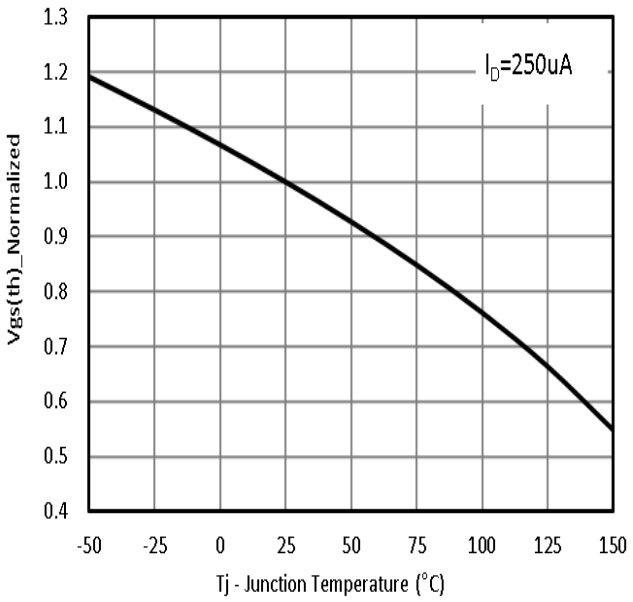

Drain-source breakdown voltage
$-V_{BR(DSS)}=f(T_j)$; I_D=-250uA

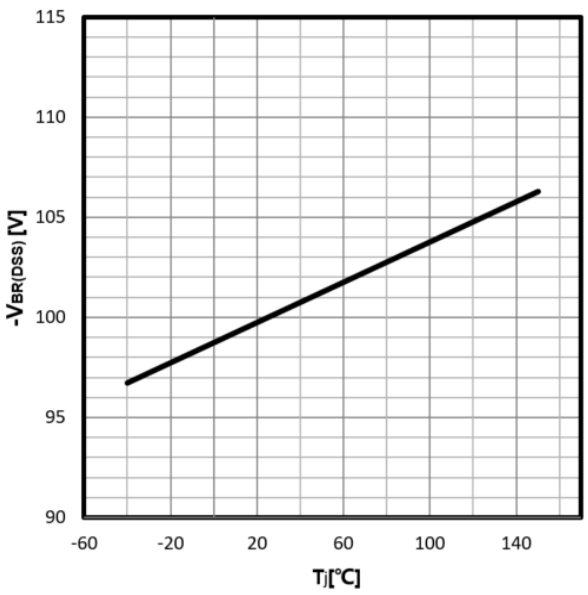

Typ. gate charge
$-V_{GS}=f(Q_g)$; I_D=-5A

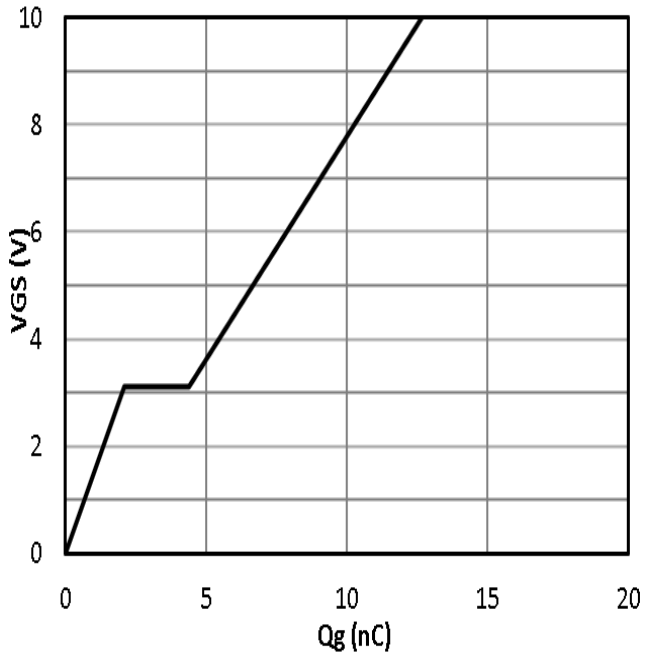

Typ. capacitances
C =f(-V_{DS}); V_{GS}=0V; f =1MHz

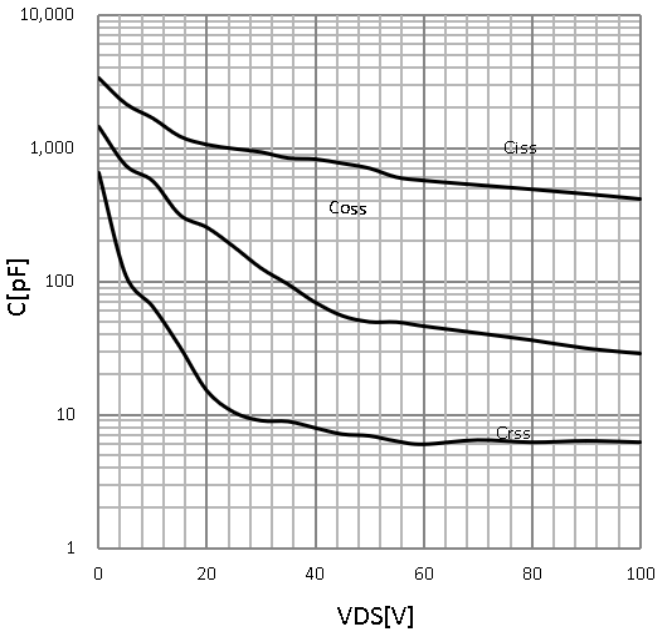

Power Dissipation

$P_{tot}=f(T_C)$

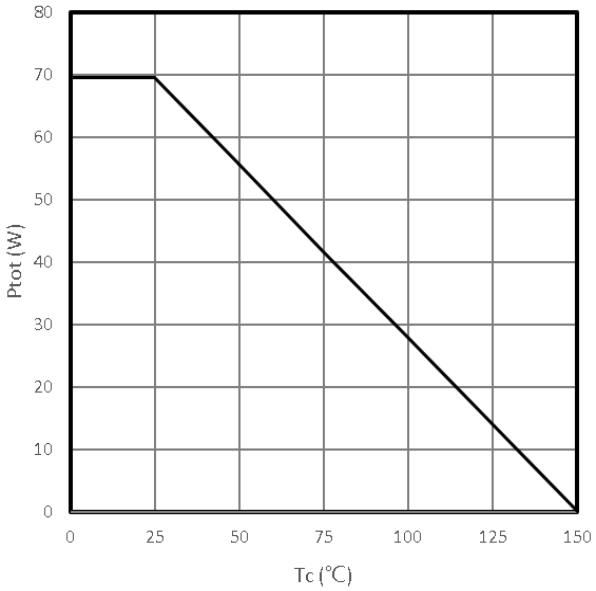

Maximum Drain Current

$-I_D=f(T_C)$

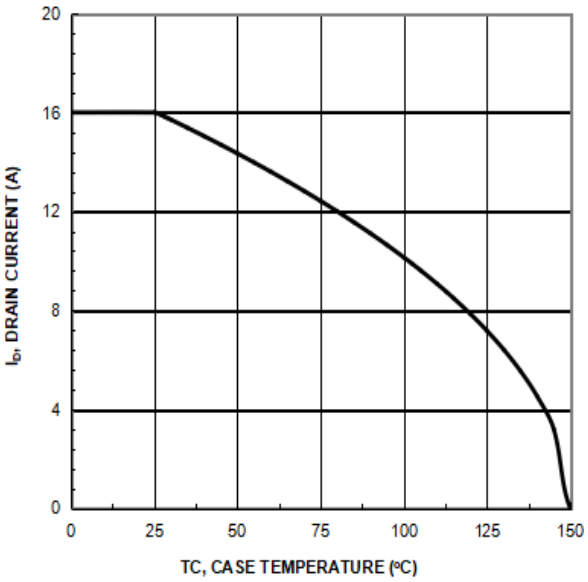

Safe operating area

$-I_D=f(-V_{DS})$

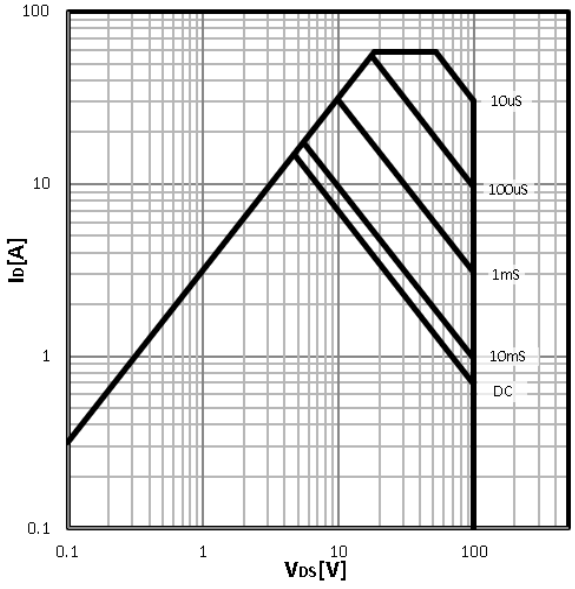

Body Diode Forward Voltage Variation

$-I_F=f(-V_{DS})$

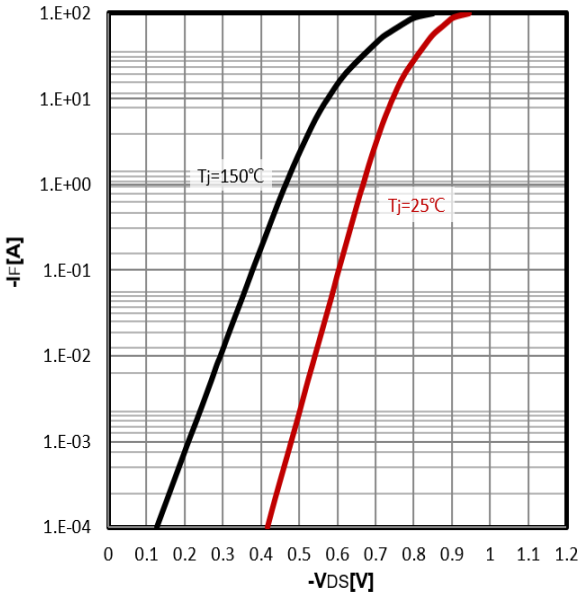

Max. transient thermal impedance

$Z_{thJC}=f(t_p)$

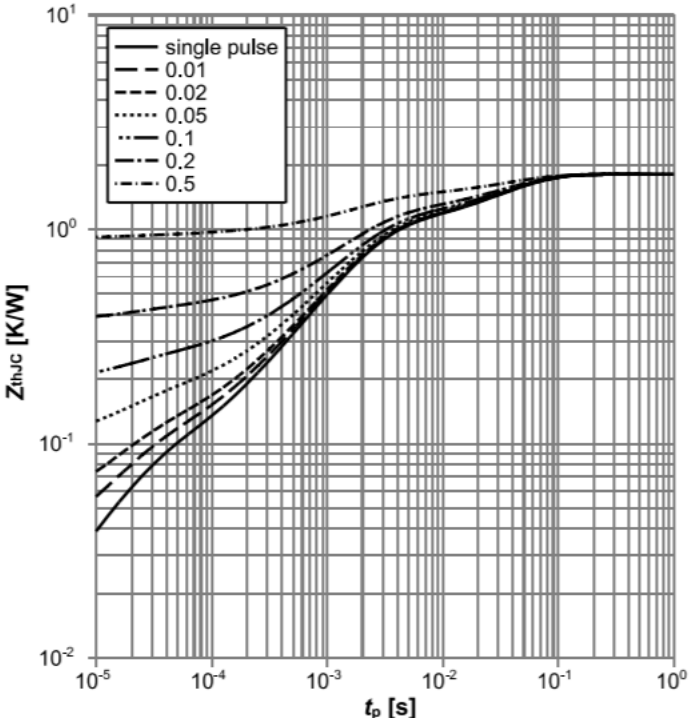

Test Circuit and Waveform:

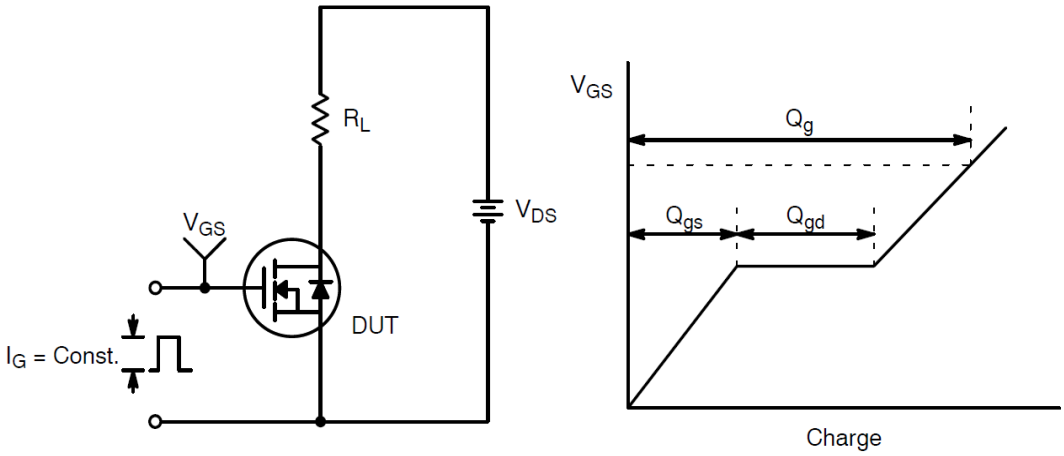

Gate Charge Test Circuit & Waveform

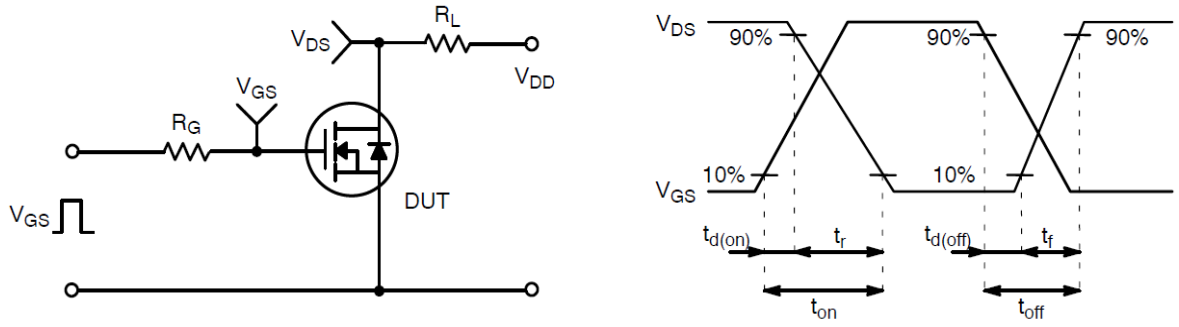

Resistive Switching Test Circuit & Waveforms

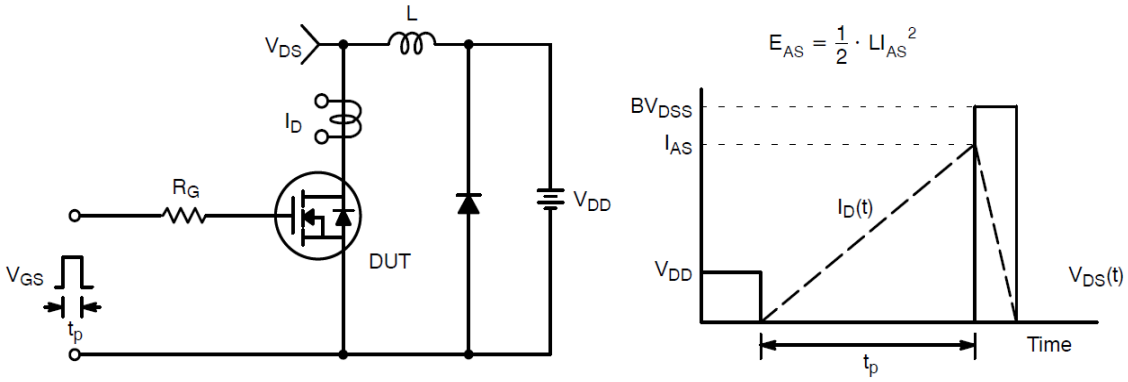

Unclamped Inductive Switching Test Circuit & Waveforms

●Dimensions（PDFN3.3*3.3）

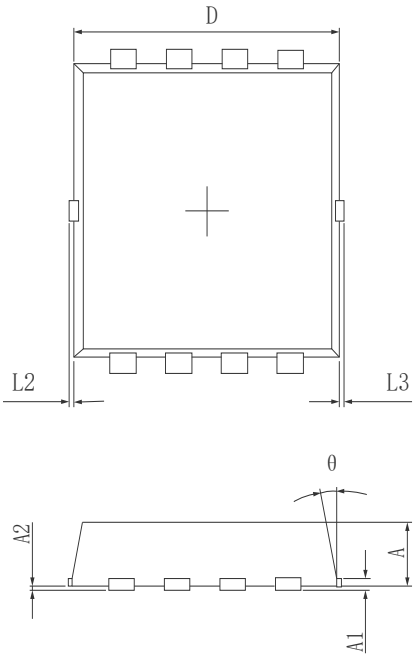

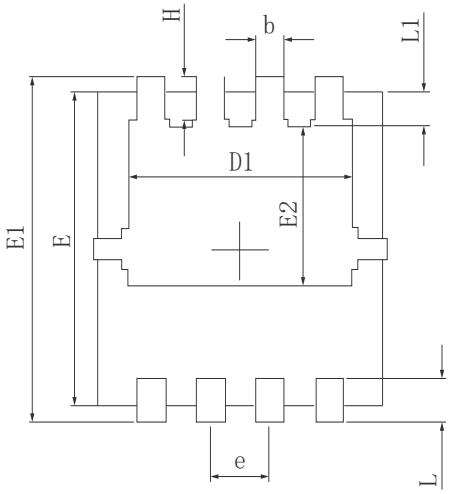

SYMBOL	MILLIMETER		
	MIN	Typ.	MAX
A	0.700	0.800	0.900
A1	0.152REF.		
A2	0~0.05		
D	3.000	3.100	3.200
D1	2.300	2.450	2.600
E	2.900	3.000	3.100
E1	3.150	3.300	3.450
E2	1.320	1.520	1.720
b	0.200	0.300	0.400
e	0.550	0.650	0.750
L	0.300	0.400	0.500
L1	0.180	0.330	0.480
L2	0~0.100		
L3	0~0.100		
H	0.315	0.415	0.515
θ	8°	10°	12°

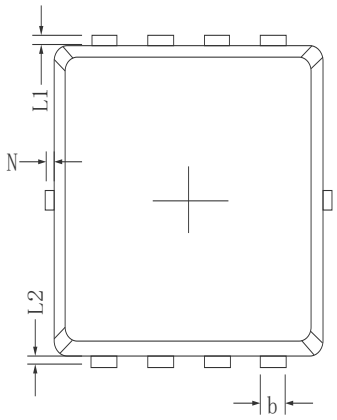

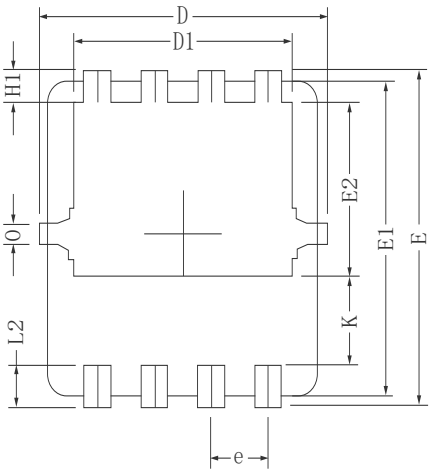

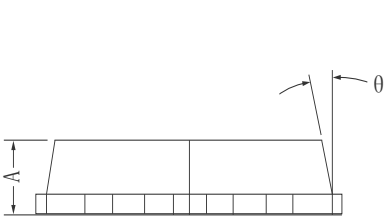

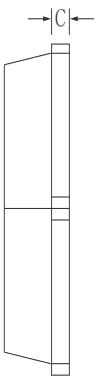

Symbols	Millimeters		
	MIN.	NOM.	MAX.
A	0.65	0.75	0.85
b	0.25	0.30	0.35
C	0.15	0.20	0.25
D	3.00	3.10	3.20
D1	2.40	2.50	2.60
E	3.20	3.30	3.40
E1	3.00	3.10	3.20
E2	1.60	1.70	1.80
e	0.65 BSC.		
H1	0.21	0.31	0.41
H2	0.30	0.40	0.50
K	0.78	0.88	0.98
L1/L2	0.10 REF.		
θ	11°	12°	13°
N	0	-	0.15
O	0.2 REF.		

PDFN3.3*3.3
Marking Instructions:

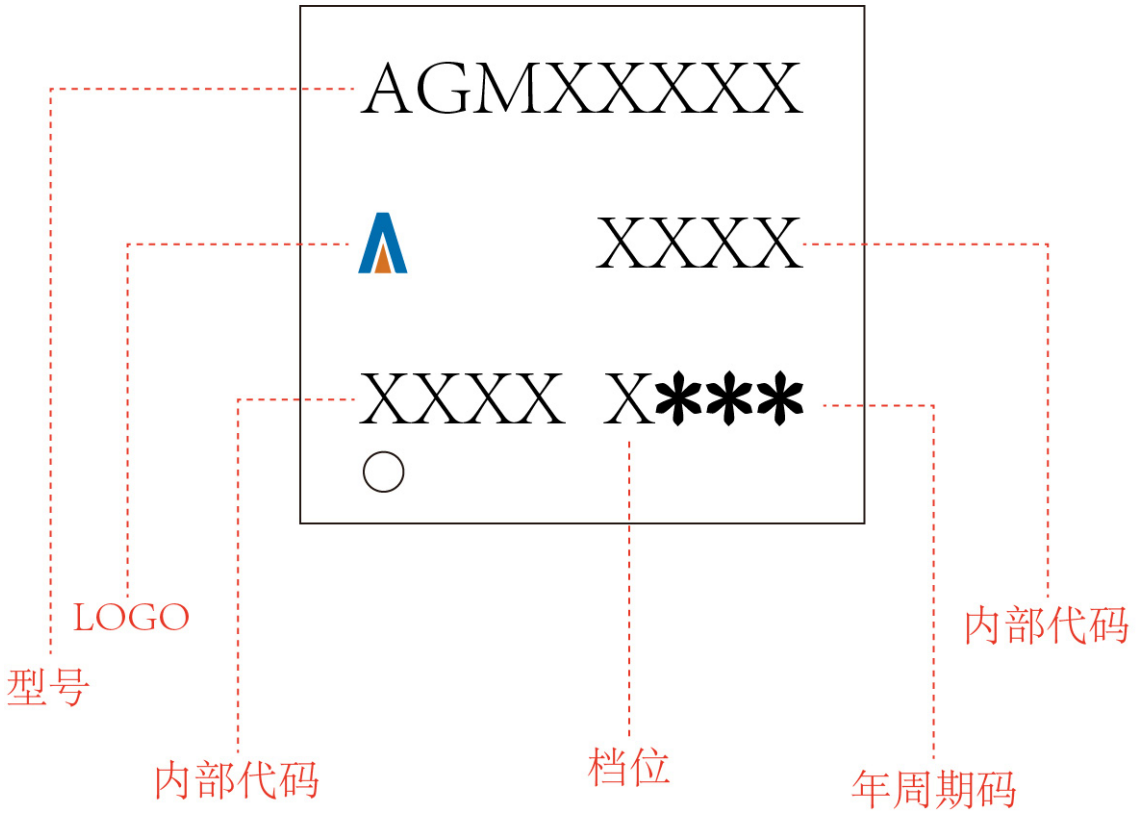

Disclaimer:

The information provided in this document is believed to be accurate and reliable. However,Shenzhen Core Control Source Electronics Technology Co., Ltd. does not assume any responsibility for the following consequences.Do not consider the use of such information or use beyond its scope.

The information mentioned in this document may be changed at any time without notice.

The products and information provided in this document do not infringe patents. Shenzhen Core Control Source Electronics Technology Co., Ltd. assumes no responsibility for any infringement of any other rights of third parties.The result of using such products and information.

This document is the second version issued on April 10th, 2024. This document replaces all previously provided information.

AGMSEMi It is a registered trademark of Shenzhen Core Control Source Electronics Technology Co., Ltd.

Copyright © 2017 Shenzhen Core Control Source Electronics Technology Co., Ltd. all rights reserved.